Public Disclosure Authorized

Public Disclosure Authorized

FINAL ENVIRONMENT ASSESSMENT REPORT (FEAR)
FOR
T & D NETWORK IN LONGLENG AND TUENSENG DISTRICTS UNDER NERPSIP TRANCHE-1, NAGALAND

August, 2020

Prepared for:

पावरग्रिड

Power Grid Corporation of India Limited

Prepared by:

RSET
Environmental Consulting

R. S. Envirolink Technologies Pvt. Ltd.

402, BESTECH CHAMBER COMMERCIAL PLAZA,

B-BLOCK, SUSHANT LOK-I, GURGAON

Phone: +91-124-4295383: www.rstechnologies.co.in

ABBREVIATIONS

ADC	-	Assistant Deputy Collector
AHH	-	Agricultural Households
AP	-	Affected Persons
CA	-	Compensatory Afforestation
CEA	-	Central Electricity Authority
CFC	-	Chlorofluorocarbon
CPIU	-	Central Project Implementation Unit
CPR	-	Common Property Resources
CPTD	-	Compensation Plan for Temporary Damage
CRM	-	Contractor's Review Meeting
DC	-	Deputy Collector
DPN	-	Department of Power, Nagaland
DPR	-	Detailed Project Report
EMF	-	Electro Magnetic Field
EMP	-	Environment Management Plan
EN	-	Endangered
EPA	-	Environment Protection Act
ESMU	-	Environment and Social Management Unit
ESPPF	-	Environment and Social Policy & Procedures Framework
FEAR	-	Final Environment Assessment Report
FRA	-	Forest Right Act
FSI	-	Forest Survey of India
GA	-	Geographical Area
GCC	-	General Conditions of Contract
GHG	-	Green House Gas
GIS	-	Geographical Information System
GoI	-	Government of India
GoN	-	Government of Nagaland
GPS	-	Global Positioning System
GRC	-	Grievance Redress Committee
GRM	-	Grievance Redressal Mechanism
GSDP	-	Gross State Domestic Product
GW	-	Green Wash
HFL	-	High Flood Level
HQ	-	Head Quarter
IA	-	Implementing Agency
IBA	-	Important Bird Area
ICNIRP	-	International Commission on Non-Ionizing Radiation Protection
IEAR	-	Initial Environment Assessment Report
ISFR	-	India State of Forest Report

ITI	-	Industrial Training Institute
IUCN	-	International Union for Conservation of Nature
Km	-	Kilometer
kV	-	KiloVolt
LC	-	Least Concerned
LILO	-	Line-In Line-Out
MDF	-	Moderately Dense Forest
MoEF&CC	-	Ministry of Environment Forest & Climate Change
MSE	-	Medium and Small Enterprise
MVA	-	Mega Volt Ampere
MW	-	MegaWatt
NA	-	Not Assessed
NBSAP	-	National Biodiversity Strategy and Action Plan
NBSS&LUP	-	National Bureau of Soil Survey & Land Use Planning
NER	-	North East Region
NERPSIP	-	North Eastern Region Power System Improvement Project
NH	-	National Highway
NOC	-	No Objection Certificate
NPV	-	Net Present Value
NT	-	Near Threatened
NTFP	-	Non Timber Forest Product
NU	-	Nagaland University
OF	-	Open Forest
PCB	-	Poly Chlorinated Biphenyl
PF	-	Protected Forest
PGCIL	-	Powergrid Corporation of India Limited
PIU	-	Project Implementation Unit
PRA	-	Participatory Rural Appraisal
PWD	-	Public Works Department
RF	-	Reserved Forest
RFA	-	Recorded Forest Area
RFCTLARRA	-	Right to Fair Compensation and Transparency in Land Acquisition, Rehabilitation and Resettlement Act
ROW	-	Right of Way
RSET	-	R S Envirolink Technologies Pvt. Ltd.
S/s	-	Substation
SDO	-	Sub Divisional Officer
SH	-	State Highway
SIA	-	Social Impact Assessment
SMF	-	Social Management Framework
SPCU	-	State Project Coordination Unit
Sq km	-	Square Kilometer

ST	-	Scheduled Tribes
T&D	-	Transmission and Distribution
TOF	-	Tree Outside Forest
TRC	-	Terrace Rice Cultivation
VDF	-	Very Dense Forest
VU	-	Vulnerable
WB	-	World Bank
ZSI	-	Zoological Survey of India

CONTENTS

Page No.

EXECUTIVE SUMMARY

CHAPTER 1: INTRODUCTION & PROJECT DESCRIPTION

1.1 PROJECT BACKGROUND 1.1
1.2 PROJECT JUSTIFICATION 1.2
1.3 PROJECT BENEFIT 1.4
1.4 PRESENT SCOPE & PRESENT STUDY 1.5
1.5 OVERALL PRPJECT PROGRESS 1.7
1.6 OBJECTIVE & METHODOLOGY ADOPTED FOR FEAR STUDY 1.8

CHAPTER 2: BASELINE DATA

2.1 INTRODUCTION 2.1
2.2 STUDY AREA DISTRICTS 2.1
2.2.1 Physical Environment 2.1
2.2.1.1 River System 2.2
2.2.1.2 Meteorology 2.2
2.2.1.3 Soil 2.3
2.2.1.4 Land use Pattern 2.7
2.2.1.5 Landslide Vulnerability 2.8
2.2.1.6 Erosion Vulnerability 2.10
2.2.2 Biological Environment 2.11
2.2.2.1 Floristic 2.12
2.2.2.2 Forest Cover 2.13
2.2.2.3 Forest Cover inside and outside Recorded Forest Area (or Green Wash) 2.15
2.2.2.4 Floristic Diversity 2.15
2.3 STUDY AREA BASELINE DATA 2.16
2..3.1 Floristics Elements 2.16
2.3.1.1 Taxonomic Diversity 2.17
2.3.1.2 Rare Endangered and Threatened (RET) Species 2.18
2.3.1.3 Invasive Species and Their Control 2.19
2.3.1.4 Vegetation Profile of the Sampling Area 2.20
2.3.1.5 Economically Important Plant Species 2.23
2.3.2 Faunal Elements 2.26
2.3.2.1 Mammals 2.27
2.3.2.2 Avifauna 2.28
2.3.2.3 Herpetofauna 2.31
2.3.2.4 Butterflies 2.32
2.3.3 Protected Areas 2.33

2.3.4 Community Reserve 2.34
2.3.5 Sacred Groves and Community Conserved Areas (CCA) 2.36
2.3.6 Important Bird Areas (IBA) 2.37
2.3.7 Wetland 2.38
2.4 SOCIO-ECONOMIC ENVIRONMENT 2.40

CHAPTER 3: POLICY, LEGAL AND REGULATORY FRAMEWORK
3.1 INTRODUCTION 3.1
3.2 CONSTITUTIONAL PROVISIONS 3.1
3.3 ENVIRONMENTAL PROVISIONS 3.2
3.4 SOCIAL PROVISIONS 3.2
3.5 WORLD BANK OPERATIONAL POLICY 3.8
3.6 STATUTORY PERMISSION/LICENSES/NOC OBTAINED 3.8

CHAPTER 4: MAJOR FEATURES OF FINAL ROUTE & ENVIRONMENT IMPACT
4.1 INTRODUCTION 4.1
4.2 ENVIRONMENTAL CRITERIA FOR ROUTE SELECTION 4.1
4.3 MAJOR FEATURES OF FINAL ROUTE 4.9
4.3.1 Transmission lines 4.9
4.3.2 Distribution Lines 4.10
4.4 PROJECT IMPACTS 4.10
4.4.1 Impact of Transmission & Distribution Lines 4.15
4.4.1.1 Type and Use of Land within Corridor Right of Way 4.15
4.4.1.2 Impact on Soil & Surface Geology 4.15
4.4.1.3 Impact on Land for Tower Base & Pole 4.16
4.4.1.4 Impact on Crop Area (RoW Corridor & Tower/Pole) 4.19
4.4.1.5 Impact on Trees 4.19
4.4.1.6 Impact on Other Assets (Small Shed in Agriculture Fields) 4.20
4.4.1.7 Other Damages 4.20
4.4.2 Impact Due to Construction of New Substation and Bay Extension 4.21
4.4.3 Impact on Indigenous People 4.21
4.4.4 Summary of Impacts 4.22

CHAPTER 5: POTENTIAL ENVIRONMENTAL IMPACTS, EVALUATION AND ITS MANAGEMENT
5.1 INTRODUCTION 5.1
5.2 IMPACT DUE TO PROJECT LOCATION 5.1
5.2.1 Resettlement 5.1
5.2.2 Land Value Depreciation 5.2
5.2.3 Historical/Cultural Monuments/Value 5.2
5.2.4 Encroachment into Precious Ecological Areas 5.2
5.2.5 Encroachment into Other Valuable Lands 5.3
5.2.6 Interference with Other Utilities and Traffic 5.4

5.2.7 Interference with Drainage Pattern 5.4
5.3 ENVIRONMENTAL PROVVBLEMS DUE TO DESIGN 5.4
5.3.1 Escape of Polluting Materials 5.4
5.3.2 Explosion/Fire Hazards 5.6
5.3.3 Erosion Hazards due to Inadequate Provision for Resurfacing of Exposed Area 5.6
5.3.4 Environmental Aesthetics 5.7
5.3.5 Noise/Vibration Nuisances 5.7
5.3.6 Blockage of Wildlife Passage 5.8
5.4 ENVIRONMENTAL PROBLEMS DURING CONSTRUCTION PHASE 5.8
5.4.1 Uncontrolled Silt Runoff 5.8
5.4.2 Nuisance to Nearby Properties 5.9
5.4.3 Interference with Utilities and Traffic and Blockage of Access Way 5.10
5.4.4 Inadequate Resurfacing for Erosion Control 5.11
5.4.5 Inadequate Disposition of Borrow Area 5.12
5.4.6 Protection of Worker's Health/Safety 5.12
5.5 ENVIRONMENTAL PROBLEMS RESULTING FROM OPERATION 5.13
5.5.1 O&M Staff/Skills Less than Acceptable Resulting in Variety of Adverse Effects 5.13
5.6 CRITICAL ENVIRONMENTAL REVIEW CRITERIA 5.14
5.6.1 Loss of Irreplaceable Resources 5.14
5.6.2 Accelerated Use of Resources for Short-term Gains 5.14
5.6.3 Endangering of Species 5.15
5.6.4 Promoting Undesirable Rural-to Urban Migration 5.15
5.7 PUBLIC CONSULTATION 5.15
5.8 COMPLIANCE OF EMP 5.18
5.9 CONCLUSIONS 5.31

CHAPTER 6: MONITORING AND ORGANIZATION SUPPORT STRUCTURE

6.1 ADMINISTRATIVE ARRANGEMENT FOR PROJECT IMPLEMENTATION 6.1
6.2 REVIEW OF PROJECT IMPLEMENTATION PROGRESS 6.1
6.3 E&S MONITORING 6.2
6.4 GRIEVANCE REDRESSAL MECHANISM (GRM) 6.4
6.4.1 Grievance Received & Resolved 6.7

LIST OF TABLES

Table 1.1: State Wise Scope of Work Proposed Under Tranche-1 1.2
Table 1.2: Details of State Wise Funding 1.2
Table 1.3: Summary of subprojects in Tranche-I Under NERPSIP 1.3
Table 1.4: Brief Status on Project Implementation Progress 1.7
Table 2.1: Rivers Flowing Through Project Districts 2.2
Table 2.2: Soils in Project Districts 2.5
Table 2.3: Land use Pattern of Project Districts 2.7
Table 2.4: Percentage Area under Different Forest Types of Nagaland 2.12
Table 2.5: Forest Cover in Project Districts 2.14
Table 2.6: Forest Cover inside and outside Recorded Forest Area or (Green wash) in Nagaland 2.15
Table 2.7: Shannon-Wiener Index of Tree, Shrub and Herb Species in different Type Groups of Nagaland 2.16
Table 2.8: Transmission Lines and Transects Locations for Vegetation Sampling 2.16
Table 2.9: RET Plant Species Reported from Study Area 2.19
Table 2.10: Wild Edible Plant Species Used by Tribes in Study Area 2.23
Table 2.11: Plant Species Used for Medicinal Purposes 2.24
Table 2.12: List of Mammals 2.27
Table 2.13: List of Avifauna 2.28
Table 2.14: List of Herpetofauna 2.31
Table 2.15: Butterflies in Nagaland 2.32
Table 2.16: Protected Areas Network in Nagaland 2.34
Table 2.17: List of Community Reserves Notified Under section 36C(1) Wildlife Protection Act 1972, in Nagaland 2.35
Table 2.18: List of Sacred Groves & Community Conserved Areas in Project Districts 2.37
Table 2.19: Important Bird Areas in Nagaland 2.37
Table 2.20: District Wise Area of Wetlands (Type-Wise) in Project Districts 2.39
Table 2.21: Demographic Profile of Project Districts 2.42
Table 2.22: Literacy Profile of Project Districts 2.42
Table 2.23: Occupational Pattern of Project Districts 2.42
Table 2.24: Main Worker Profile of Project Districts 2.42
Table 3.1: Environmental Provisions 3.3
Table 3.2: Social Provisions 3.6
Table 3.3: World Bank Operational Policy 3.9
Table 4.1: Change in Scope of Work w.r.t. IEAR 4.5
Table 4.2: Finalized Location of Transmission & Distribution Substation 4.6
Table 4.3: Type and Use of Land within Corridor of RoW 4.15
Table 4.4: Estimation of Actual Loss of Land for Tower Base & Pole 4.16
Table 4.5: Estimation on Loss of Land for Crop Damage due to Overhead Lines 4.19
Table 4.6: Loss of Trees 4.20

Table 4.7: Loss of Other Assets 4.20
Table 4.8: Summary of Impacts 4.22
Table 5.1: RoW Width & Clearance between Conductors and Trees 5.1
Table 5.2: Environment Monitoring Plan 5.19
Table 6.1: Details of Grievances/Complaints 6.7

LIST OF FIGURES

Figure 1.1: Power Map of Nagaland 1.4
Figure 1.2: Proposed T&D Network in Longleng and Tuensang Districts under NERPSIP 1.6
Figure 2.1: Soil Map of Project Districts 2.4
Figure 2.2: Landslide Map of India 2.8
Figure 2.3: Erosion Vulnerable Area w.r.t. Sub-Project 2.12
Figure 2.4: Forest Cover Map of Nagaland 2.14
Figure 2.5: Forest Cover in Project Districts 2.15
Figure 2.6: Protected Area Map of Nagaland 2.34
Figure 2.7: Wetland Area Map of Nagaland 2.39
Figure 4.1: Satellite Imagery Showing Route of 132kV S/C (on D/C Tower) Tuensang – Longleng Line 4.7
Figure 4.2: Satellite Imagery Showing Route of 33 kV DL from 132/33 kV New Longleng S/S to 33/11 kV New Longleng S/S 4.8
Figure 4.3: Crossing of Liyung Nala and Avoidance of Habitation Area in Tuensang Village 4.11
Figure 4.4: Avoided Crossing of Yijung River and Village Area 4.12
Figure 4.5: Avoided Crossing of Village Area 4.13
Figure 4.6: Route along the existing Road to Avoid Habitation Area at Longleng Town 4.14
Figure 4.7: Typical Plan of Transmission Line Tower Footing 4.17
Figure 4.8: 33 kV Lines (Single & H Pole) Depicting Base Area Impact 4.18
Figure 6.1: Constitution of Site Level GRC, NERPISP, Nagaland 6.5

LIST OF ANNEXURES

Annexure I: List of Angiosperm
Annexure II: Details of Tower Schedule of 132kV Line
Annexure III: NoC from Concerned Land owner/ Headman/ Village Council
Annexure IV: Sample Case of Compensation Payment
Annexure V: Drawing of Bird Guard/ Anti Perching Devises
Annexure VI: Signed Copy of Safety Plan Submitted by Contractor
Annexure VII: Safety/Penalty Provisions in Contract Conditions
Annexure VIII: Approved Labour License & Insurance Policy by Contractor
Annexure IX: Safety Checklists
Annexure X: Details of Public Consultation

LIST OF MAPS

Map 1: Topographic map showing route details of 132 KV S/C Tuensang - Longleng TL and 33 kV SC Longleng - Longleng Town DL

EXECUTIVE SUMMARY

North Eastern Region Power Supply Improvement Project (NERPSIP) is a World Bank funded project aimed at improving the impoverished power transmission and distribution system in the North Eastern states of India with Power Grid Corporation of India Ltd. (POWERGRID), the single transmission utility of the country as the implementing agency (IA). The present Final Environmental Assessment Report (FEAR) is for the transmission and distribution system in Longleng and Tuensang district and has been undertaken to verify the actual locational details of the project elements, to report any impacts on the biodiversity and protected area and the project affected people, and to assess the compliance of the Initial Environmental Assessment Report (IEAR) /Environment Management Plan (EMP) prepared and submitted by the IA for the instant project. The elements of the present project include one 132 kV transmission lines of 25.14 km, construction of one new transmission sub-station, bay extension of one transmission sub-station, one 33 kV distribution line of 5 km and construction of one new distribution sub-station.

The topography of the districts is mainly hilly and the plain areas are very limited. About 67% of the landscape has a forest cover (very dense forest, moderately dense forest and open forest), and the rest (33%) is constituted by jhum land, agricultural fields, settlements etc. Most of the land is privately owned and some are under the jurisdiction of the Village Council.

The final layout of transmission lines has been carefully selected from three given options. The alignment has successfully avoided all reserve forests, protected areas, all ecological and social sensitive areas such as protected areas, sacred groves, community conserved areas, important bird areas, wetlands, settlements, common property resources, etc. The landuse along the RoW (27 m for 132 kV) of lines comprises of agricultural land, private plantation and govt. land. The original length of the line has been slightly increased to 29.14 km from earlier 28.74 km as the location of substation is slightly changed for better accessibility. The route was further optimized during ground truthing survey so that environment & social sensitive areas are avoided/ minimized and the route was preferred due to feasibility and lesser ROW problems. A total of 102 towers are to be erected for the proposed transmission line.

Similarly, the distribution line too has been aligned mostly along the existing road and by avoiding dense forest areas. Here, the RoW corridor being narrower (15m) will further reduce the necessity of tree felling. Much of the line would only need lopping of branches for unhindered passage. The landuse along the RoW of lines comprises of agricultural land and private plantation. There is no change in the original length of the line no additional impacts of any kind apart from earlier identified impacts in IEAR/EMP are anticipated. A total of around 137 poles are to be erected for the proposed distribution line.

Sub-station locations are based on environment and social aspects and technical requirement. Various site specific parameters that include availability of infrastructure facilities such as access roads, water, distance from railheads, type of land (Government/ revenue/private land); social impacts such as number of families getting affected; CPR including feasibility of acquisition were considered for analysis. The social aspects are provided due weightage after technical requirement in decision making for selection/finalization of land for substation. In the instant case land for all the proposed substations are either in possession of DPN or identified for purchase on willing seller–willing buyer basis.

Impacts due to project have been analyzed for all the phases of project i.e. during design, construction and operation. Since, no involuntary acquisition was involved and fresh lands were secured only through private purchase there is no R & R and resettlement issues. Due to electricity supply, land value is expected to increase, therefore, possibility of land value depreciation is not envisaged. Final routes of lines and sites for construction of new sub-stations don't involve any monuments of historical or cultural significance. Since forest area covered under Forest (Conservation) Act, 1980 has been completely avoided with careful selection of route alignment, therefore, provisions of the Forest (Conservation) Act, 1980 shall not prevail. However, in case of felling of trees in non-designated forest areas DPN/IA shall provide fund for compensatory afforestation for planting 3 trees for every tree to be felled subject to availability of land. As per existing law, land for tower/pole & right of way is not acquired and ownership of land remains with the owner and agricultural activities are allowed to continue after construction activity. However, as per existing laws compensation for all damages (tree/crop) are paid to the individual land owner. Additionally, land compensation @100% land value for tower base is also paid to land owner as per prevailing practices. execution of the projects covered in this report has not resulted in any steep rise in traffic volume. The project does not require availing clearances from Department of Railways, Department of

Telecommunications, and the Ministry of Aviation. Further, the present project requires very less vehicular movement and that too restricted to construction period only. Hence, neither any interference with other utility nor steep rise in traffic volume is anticipated/ observed. The lines proposed under this scheme don't involve any tower/ pole to be placed in river bed which could interfere with existing drainage patterns. In sub-stations, all drainage channels along or inside substations are being trained and connected to main or existing drainage to avoid any erosion due to uncontrolled flow of water.

Detailed specification with respect to equipment design and substation drainage and sewage design has been included in tender document to avoid any incidence of land and water contamination. Adequate safety measures are in place to avoid any potential fire/ explosion hazard. All the soil excavated for tower/pole footings and substations construction are optimally utilized for backfilling and the remaining soil being spread evenly and compacted. Top soil disturbed during the development of sites are used to restore the surface of the platform. Infertile and rocky material are dumped at carefully selected dumping areas and used as fill for substation/ and tower/pole foundations. Hence, possibility of erosion of exposed area due to construction activity is negligible. To contain the noise level within the permissible limits, measures like providing sound and vibration dampers and rectification of equipment are undertaken. In addition, plantations of sound absorbing species like Casuarinas, Tamarind, and Azadrichta are raised at the substations that reduce the sound level appreciably. The proposed lines are not passing through any forest area, wildlife area. Since there is no protected area or demarcated/ documented migration path of wildlife like elephant corridor existing near to subproject locations, hence, possibility of any disturbance to wildlife is not imminent. No bird migration/fly path found in project area. Moreover, bird guard/anti perching devices are being made part of BoQ/tower design.

Majority of tower/pole locations are on hilly terrain, therefore, tower/ pole have been positioned on hilltops and where ever positioning of tower on hill top is not possible leg extension is being utilized so as to minimize/ avoid benching/ revetment and to provide great stability. Retaining walls are also being constructed to eliminate the chances of silt runoff/ soil erosion. Out of total 102 towers being/ to be erected approx. 75% (77 no.) are with leg extension. The excavated material has been backfilled and any remaining earth, if any have been spread around the base and compacted. In case of distribution lines all the excavated soil is backfilled and compacted after erection of tubular poles. In case of sub-station, existing one are located on

flat land and adjacent to existing road and new ones are also being constructed on flat land after site clearing and leveling. So far there are no instances with potential of erosion during construction of above said lines. Any adverse impact arising during the construction is limited to the boundaries of proposed substation only and neither impacts nearby habitat/property nor health & safety of neighboring community. Tower/pole foundations involve excavations on small scale basis and the excavated soil is utilized for back filling. In case of substations, generally the sites are selected in such a manner that the volume of cutting is equal to volume of filling so as to avoid borrowing of the area. Issues relating to operational health and safety has been adequately addressed. The labourers are provided with safety gear and provisions for first aid and arrangement for shifting of affected persons to nearby hospitals are also in place. Compensation for injury and death has been ensured through provisions in Safety Plan & Contract condition. Proper sanitation facilities and safe drinking water are being provided in the project locations. The site managers have been advised to ensure that there are no instances of open defecation.

The IA has a continuous monitoring mechanism of the project w.r.t. compliance of the mandatory requirements as stipulated in the IEAR. Thus, the adherences to the clauses by the contractors are regularly monitored especially in respect of EMP implementation, OHS compliance. The project has thus far had zero fatality which is indicative of the strict vigil of the IA.

The Capacity building and Institutional Strengthening program of the IA is held intermittently to enhance the skills of the project officials. Further, meetings between IA and DPN are held on a monthly/ bimonthly basis to assess the work progress and difficulties encountered in respect of land acquisition, RoW and compensation if any.

Public is informed about the project at every stage of execution. Public consultation using different technique like Public Meeting, Small Group Meeting, informal Meeting have been carried out during different activities of project cycle. For the Participatory Rural Appraisal (PRA), informal meetings were held with various stakeholders such as IA, contractors, labours, villagers etc. to capture their view about the project. It emerged from the survey that the PAP were appreciative of the project and hoped that the power scenario would improve after commissioning of the project. Local people are also getting benefited through project related employment that was being generated.

Overall, the planning and layout of the project elements have been undertaken in a judicious manner so as to ensure minimum environmental impact. However, during the implementation phase, especially in respect of the construction, strict monitoring by the IA should be undertaken so as to ensure proper compliance by the contractors with reference to the IEAR and especially with regard to compliance of the health and safety measures.

Chapter 1 INTRODUCTION & PROJECT DESCRIPTION

1.1 PROJECT BACKGROUND

India's North East Region (NER) stretches across the eastern foothills of the Himalayan mountain range and is comprised of seven states including Assam, Arunachal Pradesh, Manipur, Meghalaya, Mizoram, Nagaland, and Tripura.

Recognizing that intrastate Transmission & Distribution (T&D) systems in the NER states have remained very weak and that there is a critical need to improve the performance of these networks, the Central Electricity Authority (CEA) developed a comprehensive scheme for the NER in consultation with POWERGRID and the concerned state governments. This scheme is intended to (a) augment the existing T&D infrastructure to improve the reliability of service delivery across all the NER states and (b) build institutional capacity of the power utilities and departments in the NER. This scheme is part of the Government of India's (GoI) wider efforts to develop energy resources in the NER for electricity supply within the region, to strengthen transmission networks, expand and strengthen sub-transmission systems, and extend last mile electricity connectivity to household.

GoI requested for World Bank's (WB) support in implementing a set of priority investments in six NER States In 2016, the WB has approved a loan (IBRD 470 USD Million) to the GoI for **North Eastern Region Power System Improvement Project (NERPSIP)** which aims to create a robust intrastate transmission and distribution network in all the six (6) North Eastern States. The project being funded on 50:50 (WB loan: GoI) basis except the component of capacity building for Rs. 89 crore, which GoI will bear entirely. The scheme is to be taken up under a new Central Sector Plan Scheme of Ministry of Power (MoP).

MoP, GoI has appointed Power Grid Corporation of India Limited **(PGCIL/ POWERGRID)** as Implementing Agency (IA) to six North Eastern States for the said project under Tranche-1 in close coordination with the respective State Governments/Utilities. However, the ownership of the assets shall be with the respective State Utilities/State Government which upon progressive commissioning shall be handed over to them for taking care of Operation and Maintenance of assets. POWERGRID is also facilitating in building the institutional capacity of the state departments and utilities to continue

managing the rehabilitated networks in an efficient manner. The state wise scope of works proposed under Tranche-1 is given below in **Table 1.1**.

Table 1.1: State Wise Scope of Work Proposed Under Tranche-1

State	Transmission/ Sub-station (132kV & above)			Distribution (33kV)		
	Line (km)	New S/s (No.)	Total MVA (New & Aug.)	Line (km)	New S/s (No.)	Total MVA (New & Aug.)
Assam	233	11	1644	479	16	240
Manipur	254	2	160	131	13	229.4
Meghalaya	225	4	940	263	11	135
Mizoram	143	3	125	5	1	6.3
Nagaland	193	5	245	60	10	200
Tripura	261	9	1306.5	1096	34	450.5
Total	**1309**	**34**	**4420.5**	**2034**	**85**	**1261.2**

The project has two components namely Component A: Priority Investments for Strengthening Intrastate Transmission, Sub-transmission, and Distribution Systems, and Component B: Technical Assistance for Capacity Building and Institutional Strengthening (CBIS) of Power Utilities and Departments of Participating States. The total project cost is **Rs. 5111.33 Crore** with financing from both GoI and Bank on 50:50 basis. The Bank is providing financial support to the tune of US$ 470 million (**Rs. 2511.165 Crore**) under the Loan No.-8631-IN which was signed on 28th November 2016 and became effective from 20th February 2017. The loan closing date is 31st March 2023. The remaining financing including capacity building will be met through Govt. of India funding. Details of State wise funding is placed below in **Table 1.2.**

Table 1.2: Details of State Wise Funding

State	World Bank	Government of India		Total (Rs. in Cr.)
	Project Cost (Rs. in Cr.)	Project Cost (Rs. in Cr.)	Capacity Building (Rs. in Cr.)	
Assam	729.485	729.485	14.83	**1473.803**
Manipur	213.690	213.690	14.83	**442.213**
Meghalaya	381.050	381.050	14.83	**776.933**
Mizoram	150.965	150.965	14.83	**316.763**
Nagaland	357.290	357.290	14.83	**729.413**
Tripura	678.685	678.685	14.83	**1372.203**
Total	**2511.165**	**2511.165**	**89.00**	**5111.33**

1.2 PROJECT JUSTIFICATION

The State of Nagaland is spread over an area of about 16,579 sq. km with a population of more than 19.80 lakh. The State of Nagaland faces significant bottlenecks in electricity access and availability. The present per capita energy consumption is of the order of 218 units (kWh) against the regional per capita

consumption of about 258 units and national per capita consumption of about 779 units. Department of Power, Nagaland (DPN) has generation capacity of 24 MW at Likimro Hydro Power Project of its own. Other mini hydel plants under the state sector are DuilumRoi stage I (0.54 MW), DuilomRoi stage II (0.2 MW), Telangsao (0.6 MW), Lang (1 MW) summing up to 26.34 MW. Apart from these sources of generation the remaining power requirements for DPN is met through its share from Central Sector Power generation and power purchases from electricity traders/other sources, which is wheeled through the PGCIL network of North Eastern Region. The present average peak demand of the State stands at 120 MW which is again restricted to 80 MW due to infrastructural constraints especially in the Transmission and Distribution networks.

Besides this, the present Intra-State transmission system of the State is quite old & weak and is unable to cater to the growing power requirements of the State. Although the present transmission and distribution (T&D) system covers many areas of the State, it is inadequate in its reach and due to non-availability of redundant T&D system, outage of any transmission system element results in long term power shortages making the system highly unreliable. Besides, some of the network elements have undergone long term outage due to break-down. Therefore, it has become essential to address the above situation through remedial measures in the T&D system. Accordingly, phase wise strengthening of transmission & sub-transmission system has been proposed.

The transmission schemes proposed under Tranche-1 of Nagaland State include construction of 193 km of 220/132 kV Transmission Lines (TL) & associated 5 nos. new substation and 59 km of 33 kV Distribution Lines (DL) & associated 10 nos. substation along with augmentation & strengthening of transmission and sub-transmission spread across the State. The Power Map of Nagaland indicating the existing and proposed T&D network is placed in **Figure 1.1**. Summary of subprojects to be implemented in the State in Tranche-1 under NERPSIP along with capacity addition and cost is shown in **Table 1.3** below.

Table 1.3: Summary of Subprojects in Tranche- I Under NERPSIP

S. No.	Name of the subproject	Quantity (Nos.)	Capacity Addition (km/MVA)	Estimated Cost (Rs. in Cr.)
1	220/132 kV Transmission lines	7	193 km	729.413
2	220/132 kV substations (New/Augmentation)	10	245 MVA	

S. No.	Name of the subproject	Quantity (Nos.)	Capacity Addition (km/MVA)	Estimated Cost (Rs. in Cr.)
3	33 kV Distribution lines	10	59 km	
4	33/11kV substations (New/Augmentation)	25	200 MVA	

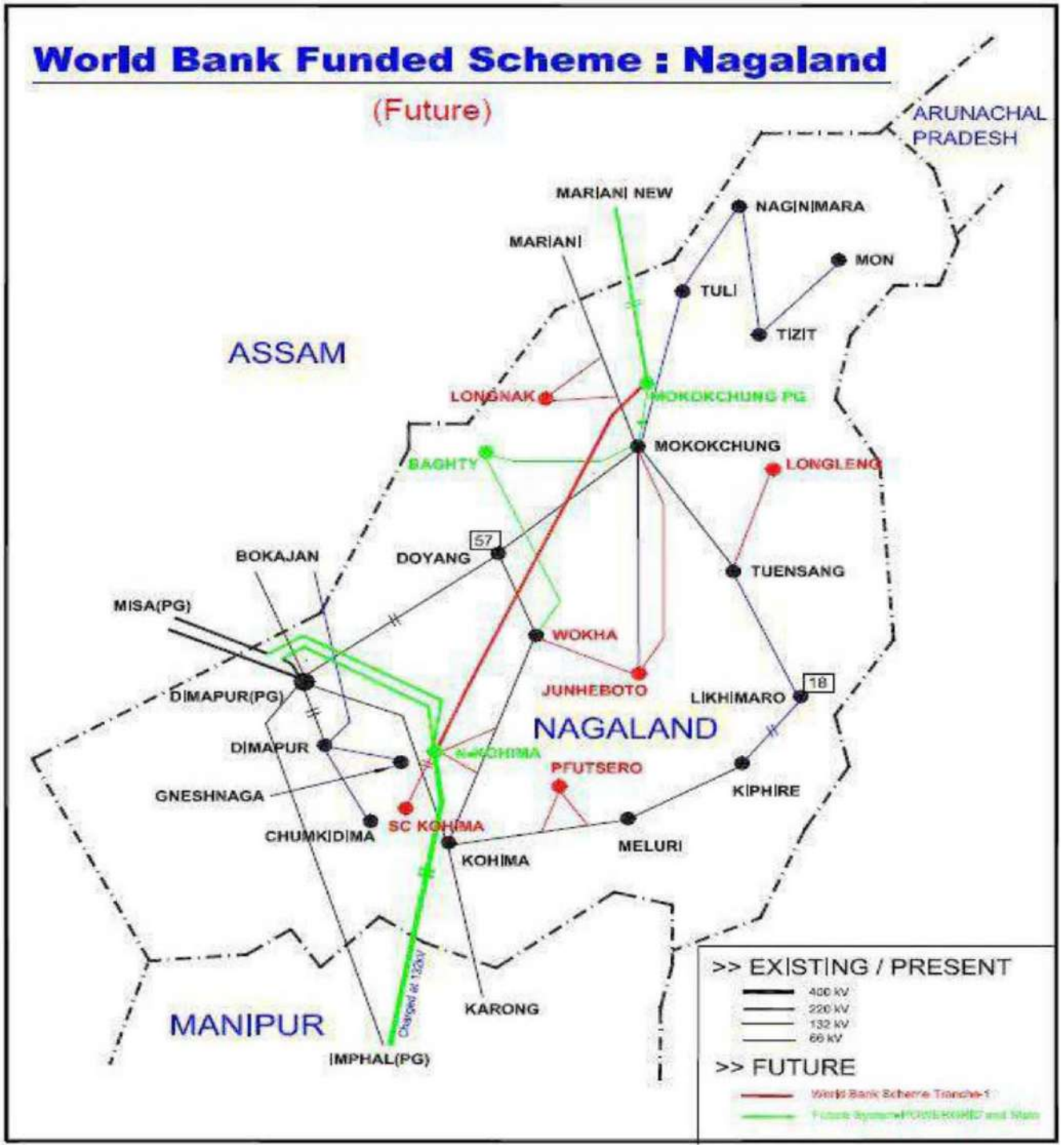

Figure 1.1: Power Map of Nagaland

1.3 PROJECT BENEFIT

The proposed transmission and distribution schemes will not only improve overall power supply situation but will also improve reliability, quality, security and enhancement of power supply of the state.

1.4 PROJECT SCOPE & PRESENT STUDY

In line with DPN's Environment and Social Policy & Procedures Framework (ESPPF), POWERGRID carried out comprehensive environment and social assessment of each subprojects and prepared Initial Environment Assessment Report (IEAR). These reports were subsequently disclosed for public information both on the State Utility, POWERGRID and Bank website after obtaining clearance from The World Bank.

As mandated in the ESPPF, a Final Environment Assessment Report (FEAR) for each subproject need to be prepared with an objective to assess the compliance of mitigation measures identified in IEAR including implementation of EMP provisions by IA/ Contractor. However, as per Project Agreement signed between POWERGRID and Bank such study is required to be undertaken by Independent Agencies as per Term of Reference agreed with Bank. As a part of this development, POWERGRID appointed **R S Envirolink Technologies Pvt. Ltd. (RSET)** as Independent consultant vide LOA Ref No.: **NEGW/C&M/2019-20/NERPSIP/600-27/FEAR-NAG/LOA-24/311** dated **29/10/2019** to carry out FEAR study.

The present Final Environment Assessment Report (FEAR) is a document developed as a consultancy assignment to validate the work undertaken and to critically examine any deviation, if any with respect to management measures as outlined in the IEAR which is based on DPN's ESPPF, World Bank's Operational Policies and Bank's Environmental, Health, and Safety Guidelines for Electric Power Transmission and Distribution.

The scope of the present study includes 132 kV transmission line and associated 132/33 kV substation, 33 kV distribution line and associated 33/11 kV substation which are being implemented in Longleng and Tuensang Districts of Nagaland. Detail of T&D components are given below and shown in **Figure 1.2.**

A. Transmission Components

i) 132 kV S/C (On D/C Tower) Tuensang – Longleng Line
ii) Establishment of 132/33 kV Sub-station at Longleng
iii) Bay Extension of 132/33 kV Sub-station at Tuensang

B. Distribution Components

i) 33 kV line from 132/33 kV Longleng (New) Sub-station to 33/11 kV Longleng Town (New) Sub-station
ii) Establishment of 33/11 kV Sub-station at Longleng Town

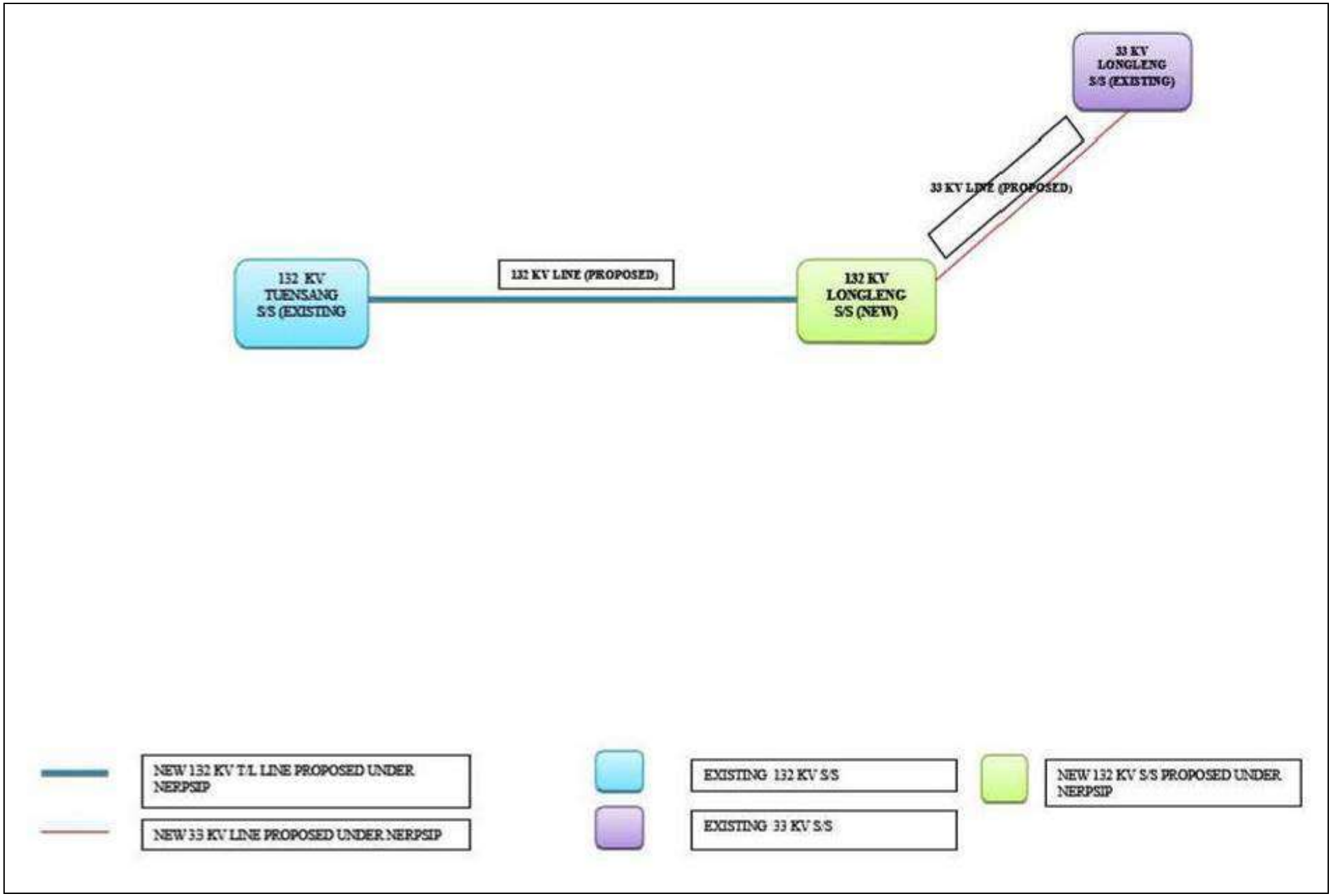

Figure 1.2: Proposed T&D Network in Longleng and Tuensang Districts under NERPSIP

1.5 OVERALL PROJECT PROGRESS

A brief status on project implementation progress of various transmission & distribution components till March 2020 is given below in **Table 1.4**.

Table 1.4: Brief Status on Project Implementation Progress

S. No.	Name of the T & D Components	Progress as on March, 2020
A	**Transmission and Distribution Line**	
1	132 kV S/C (on D/C Tower) Tuensang - Longleng Line	➢ Detailed survey of route alignment (29.14 km) completed and approved ➢ Tower foundation (102 Nos. yet to commence
2	33 kV line from 132/33 kV Longleng (New) Sub-station to 33/11 kV Longleng Town (New) Sub-station	➢ Detailed survey of route alignment (5.0 km) completed and approved
B	**Transmission and Distribution Sub-stations**	
1	132/33 kV Sub-station at Longleng (New) (2 x 10 MVA)	➢ Land area measuring 8.1 acre secured from 7 landowners through private purchase on willing buyer willing seller based on negotiated/market rate ➢ Temporary approach road 600 m constructed. Total 1.5 km of approach road to be constructed. ➢ Civil work yet to be started
2	Bay extension of 132/33 kV Sub-station at Tuensang	➢ Required land for extension work already available in the existing substation premise and hence, no fresh land secured ➢ Geotechnical Investigation report yet to be submitted. ➢ 66 kV S/S to be upgraded first to 132 kV by DoP. The construction activities put under HOLD.
3	33/11 kV Sub-station at Longleng Town (New) (2 x 5 MVA)	➢ Land area measuring 0.52 acre is Govt. land (land already in possession of DPN) ➢ Boundary Wall of 20 RM - work in progress ➢ Column casting of control room completed ➢ 4 pole box structures construction completed

S. No.	Name of the T & D Components	Progress as on March, 2020
		➢ Shuttering for slab casting of control room ready ➢ Cable trench work is under progress ➢ One 5MVA transformer received at site

1.6 OBJECTIVE & METHODOLOGY ADOPTED FOR FEAR STUDY

The main objectives of the FEAR study are to assess the mitigative measures as suggested in IEAR and/or EMP are effectively implemented/ addressed at the ground during pre-construction & construction stages of project cycles. The study also helps in establishing the status of compliance of various mitigation/management measures provided in the IEAR/EMP and suggests gaps or weaknesses, if any.

To achieve this, RSET undertook a comprehensive biophysical, environmental, socioeconomic data gathering exercise along the transmission/ distribution line routes and substations location to assess/verify the actual site specific measures implemented/ being implemented by IA/ Contractor in respect of measure/ actions listed in IEAR/EMP. The methodologies adopted for instant FEAR are as follows:

Review of existing reports: Review of existing reports and data prepared and generated by POWERGRID such as Initial Environment Assessment Report (IEAR), Environment and Social Policy & Procedures Framework (ESPPF), Compensatory Plan for Temporary Damage (CPTD) etc. was undertaken and suitably incorporated in the present report.

Literature review: Review of existing literature was undertaken for collection of secondary baseline data related to physiography, climatic conditions, demography, natural resources including forests/wildlife, protected area and socio-economic features of the study area. Sources and data so collected have been mentioned below:

- 'A Revised Survey of the Forest Types of India' by Champion and Seth (1968) was used for forest type classification of forests in the study area.

- Data collected from published literature of Zoological Survey of India, Forest Survey of India, Botanical Survey of India and other research and government publications for floral and faunal diversity of the study area.

- Soil map of the study area was prepared using 'Soils of Nagaland for Optimising Land Use, NBSS Publ.67b, 2000' published by National Bureau of Soil Survey & Land Use Planning (NBSS & LUP), Nagpur.

- Conservation status of flora and fauna of the study area as per Indian Wildlife (Protection) Act (1972), threatened status according to IUCN Red List 2020.1, Red Data Book of Indian Plants by Botanical Survey of India, Kolkata.

- Census of India 2011 for demography of the study area.

Collection of primary data and Physical verification of construction elements: To gather primary data/ physical verification, a field visit/ survey of the project area along with IA and Contractor staff was made in January 2020. The data which has been collected from field visit are implementation status of proposed environmental management plan and mitigation measures as suggested in IEAR.

Ground truthing/ physical verification was made with photographic evidence and verification of record maintained by IA and Contracts for various activities for monitoring the compliance of mitigation measures like Health and Safety measures, Solid waste and sanitation, construction of protection wall/ retaining walls, status of labour camps location of proposed substations, towers, and Transmission & Distribution Lines alignments. Findings of field survey were consolidated along with secondary data for interpretation and finding the gaps for immediate necessary action.

Surveys for flora and fauna: Being a transmission line project, phyto-sociological surveys for assessment of vegetation structure/ profile in the proximity of the proposed transmission lines, corridors of transmission line routes, sub-stations, etc. were conducted wherein line transact methodology was. Faunal surveys also were conducted along the same transects. As the topography along the routes varied from foothills to top of the hills. It was, therefore, not feasible to chart the entire routes of proposed transmission line as large part of the routes has steep slopes and due to issues of accessibility at present. However, during the field surveys at least 10% of the route was covered for the collection of baseline data, which in some cases constituted a continuous stretch and, in some cases, could be covered in parts.

The results of the primary field surveys were supplemented with secondary data to fill the gaps and further with the information generated through PRA. In addition, at all the sites bird walks were also undertaken, particularly areas under private plantations nearby the routes to locate nesting sites and for bird sightings.

Consultation: Consultation was carried out with stakeholders like POWERGRID officials, Department of Power, Nagaland officials, Contractor, migratory labours, local labours, Gram Burrah (village head) and public representatives to collect data with respect to compliance of suggested Environmental Management Plan and implementation of mitigation measures.

Development of Maps: Geo-referenced and Google maps with superimposed coordinates of project elements were generated to verify locational details and details of physical features of terrain of the project locations.

Chapter 2

BASELINE DATA

2.1 INTRODUCTION

Impact Assessment defines and assesses the potential physical, biological, and socio-economic impacts of a project and helps in formulating management and mitigation measures to minimize the impacts to a great extent. This chapter deals with the baseline status of physical, biological, socio-economic environment in the project districts as well as study area.

2.2 STUDY AREA DISTRICTS

The project is an intra-state power sector project located in the State of Nagaland and project area covers Longleng and Tuensang districts of Nagaland.

Longleng district is located between Longitude 94°E - 95°E and Latitude 26°N - 27°N of the Equator. The District has a total area of 562 sq km. It has one State and three District boundaries. On the East it shares boundary with Tuensang and Mon district of Nagaland. On North it has Nagaland's Inter-State boundary with Assam. On the west it shares boundary with Mokokchung District and on the South, it shares boundary with Tuensang and Mokokchung.

Tuensang, one of the original three districts, along with Mokokchung district and Kohima district formed at the time the state was created. District is located between latitudes 25°6' to 27°4' North and longitude of 93°20' to 95°15' East. The District has a total area of 2,536 sq km. It is the easternmost district of Nagaland and all along its eastern side it faces Myanmar (Burma). It is bounded by Mon in the north east, Longleng in the North, Mokokchung and Zunheboto in the West and Kiphire in the South.

2.2.1 Physical Environment

Longleng district is mainly hilly and the plain areas are extremely limited. The district is situated on the hill ranges of Naga Hills which is a dismembered extension of the eastern Himalayan Mountain. The hill ranges traverse more or less parallel to one another in a north-east to south-west direction. The average height of the hills varies between 150 meters to 2000 meters above mean sea level. The district headquarters, Longleng, is at an elevation of 1066.30 meters above mean sea level. On the basis of topography and physical features the district can be divided into three distinct regional and

natural divisions, namely, (i) Chingmei Range in the Northern part (ii) Shemong Range in the Middle part and (iii) Yingnyu Range in the Southern part. The hill ranges are generally higher in altitude on the eastern side of the district than that of the hills of the western side. Most parts of the region are covered with thick jungles and deciduous trees which yield valuable timber and firewood.

Tuensang is the easternmost district of Nagaland and all along its eastern side it faces Myanmar (Burma). The district is situated on the hill ranges of Naga Hills which is a dismembered extension of the eastern Himalayan Mountain. The entire district is hilly and it does not adjoin any plain area. Tuensang district headquarters is situated at an altitude is 1,575 meters. Other parts of the district have an average altitude of 1,500 meters above sea level. The hill ranges are in general spread from north - east to south - west and in between the ranges there are ravines some of which are precipitous and several hundred meters deep. Because of this variation in altitude, vegetation of this district is equally varied and variegated. Nagaland's highest peak, Mount Saramati (3840 m) is in this district. The topography of the district is characterized by high hills, deep gorges and narrow valleys comprising the Helipong Range, Yakur Range, Longtokur Range and Takhaya Range. The altitude ranges from 800 to 3500m above the main sea level.

2.2.1.1 River System

Project districts have several seasonal and perennial rivers and rivulets. The major rivers of Nagaland include Doyang, Dikhu, Dhansiri, Tizu, Tsurong, Nanung, Tsurang or Disai, Tsumok, Menung, Dzu, Langlong, Zunki, Likimro, Lanye, Dzuza and Manglu. All these rivers are dendritic in nature. While Dhansiri, Doyang and Dikhu flow westward into the Brahmaputra, the Tizu River, on the other hand, flows towards east and joins the Chindwin River in Burma. The main rivers flowing through project districts are given below in **Table 2.1**.

Table 2.1: Rivers Flowing Through Project Districts

S. No.	Name of District	Name of River
1	Longleng	Dikhu and Yongmon
2	Tuensang	Dikhu and Tizu

2.2.1.2 Meteorology

The climate of Nagaland has a wet climate with high humidity levels. Annual Rainfall varies from 175 cm to 250 cm with maximum rainfall occurring during months of June to September. Summer temperature varies from 16°C to 31°C,

while the winter temperature varies from 4°C to 24°C. Strong North West winds blow through the state during the months of February and March.

Longleng district enjoys monsoon type of climate with a minimum temperature of 10°C in winter and a maximum of 28°C in summer. The district has a fairly moderate climate where days are warm and nights are cool. Rainy season sets in during the month of May and lasts till October. From November to April, the District has dry weather relatively cool and days are bright and sunny. Fogs are a common sight during the winter months. Winter and rainy seasons dominate the year while spring and autumn seasons are very short. The average rainfall is between 2000mm and 3000mm.

Tuensang district has a sub-tropical climate and enjoys monsoon type of climate. However, unlike the plains of Assam the winter is cold and the summer moderate. In winter, the night temperature sometimes comes down to 1°C during December and January which are the coldest months. However, the average temperature during December is 4°C. In summer, the average temperature rises to about 25°C (74°F). July is the hottest month of the year. The district receives a moderately high rainfall with an average of 200 cm (80") with duration about nine months in a year and the highest concentration during July to September.

Towards the end of winter season in February-March, the sky is almost clear throughout the day, except for occasional clouds in the afternoon. During this time strong wind blows almost throughout the day and night, occasionally causing damages to thatch and tin roofed houses. The wind generally blows from south - west, and sometimes the velocity rises up to 100 km per hour.

2.2.1.3 Soil

The soil taxonomic (family) classification map of project districts was prepared as per the data by National Bureau of Soil Survey & Land Use Planning (NBSS&LUP). Soil map prepared from this data is given at **Figure 2.1**.

According to **Figure 2.1** and **Table 2.2** Soil Unit 28 is the most dominant Group (29.64%) which is characterized by moderately deep, somewhat excessively drained loamy skeletal soils on steeply sloping side slopes of hills having loamy surface with moderate erosion hazard and very slight stoniness. The other dominant group is soil unit 34 (27.58%) which is characterized by moderately shallow, somewhat excessively drained fine soils on steeply sloping hill slopes having clayey surface with severe erosion hazard and

moderate stoniness. Rest all the soil units covers less than 10% of the project districts.

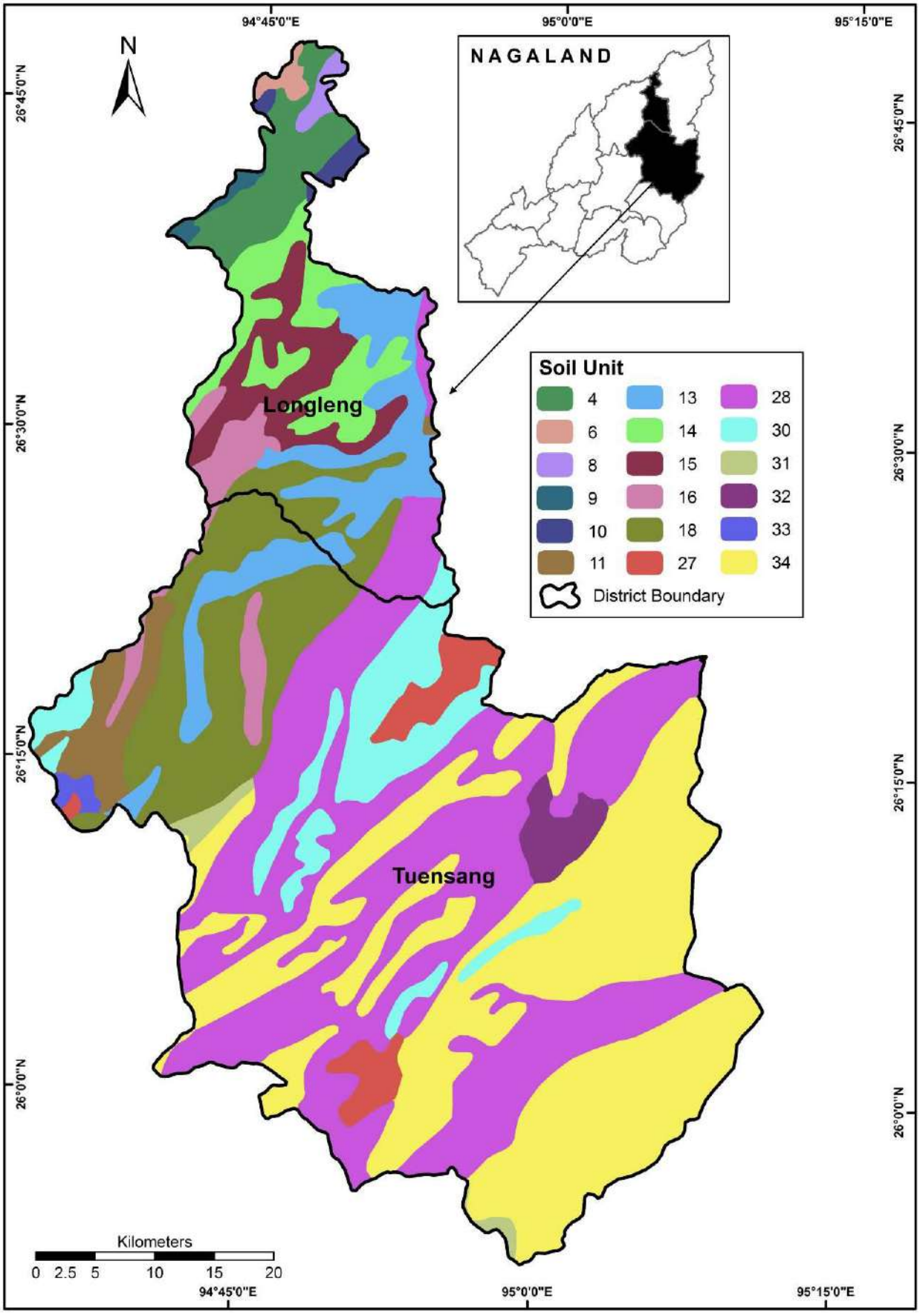

Figure 2.1: Soil Map of Project Districts
(For Legend Refer Table 2.2)

Table 2.2: Soils in Project Districts

Soil Unit	Description	Taxonomic Classification	Area (sq km)	Area (%)
4	Deep, excessively drained, fine loamy soils moderately sloping side slopes of the hills having loamy surface with moderate erosion hazards;	Fine - loamy Umbric Dystrochrepts	90.55	2.92
	associated with: Deep excessively drained fine loamy, soils on steep sloping hill tops with moderate erosion hazards and slight stoniness.	Fine - loamy, Typic Udifluvents		
6	Deep, Well drained, fine loamy soils on, moderately sloping side slopes of foot hills having loamy surface with very slight erosion hazard;	Fine - loamy, Typic Paleudults	10.51	0.34
	associated with: Moderately deep well drained fine soils on gently sloping side slopes of hills having moderate erosion hazard, and slight stoniness.	Fine, Umbric Dystrochrepts		
8	Moderately shallow, excessively drained fine soils on gently sloping side slopes of hills having loamy surface with moderate erosion hazard;	Fine, Umbric Dystrochrepts	11.49	0.37
	associated with: Deep, somewhat excessively drained fine soils on steep hill tops with moderate erosion hazards.	Fine, Typic Dystrochrepts		
9	Deep, excessively drained, Coarse loamy soils on moderately steep sloping side slopes of hills having loamy surface with moderate erosion hazard;	Coarse - loamy, Typic Udorthents	9.38	0.30
	associated with: Deep moderately well drained, fine soils on moderately steep sloping hill tops with moderate erosion hazard.	Fine, Typic Dystrochrepts		
10	Deep, somewhat excessively drained, fine soils on moderately sloping side slopes of hills having loamy surface with moderate erosion hazard and very slight stoniness;	Fine, Humic Hapludults	13.08	0.42
	associated with: Moderately deep, somewhat excessively drained fine soils on steeply sloping hill tops with severe erosion hazard.	Fine, Typic Dystrochrepts		
11	Deep, excessively drained, fine soils on moderately sloping side slopes of hills having loamy surface with moderate erosion hazard and very slight stoniness;	Fine, Typic Paleudults	70.40	2.27
	associated with: Moderately shallow excessively drained loamy skeletal soils on moderately steep side slopes of hills with severe erosion hazard and moderate stoniness.	Loamy - Skeletal, Umbric Dystrochrepts		
13	Deep, well drained fine loamy soils on moderately steeply side slopes of hills having loamy surface with moderate erosion hazard and moderate stoniness;	Fine - loamy, Umbric Dystrochrepts	184.69	5.96
	associated with: Deep, well drained, fine soils on moderately sloping hill tops with moderate erosion hazard and slight stoniness.	Fine, Typic Paleudults		
14	Deep, somewhat excessively drained, fine soils on steeply sloping side slopes of hills with clayey surface having moderate erosion hazard;	Fine, Umbric Dystrochrepts	115.57	3.73

Soil Unit	Description	Taxonomic Classification	Area (sq km)	Area (%)
	associated with: Deep somewhat excessively drained fine loamy soils on moderately steep sloping hill tops slight erosion hazard with slight stoniness.	Fine - loamy, Typic Dystrochrepts		
15	Deep, excessively drained loamy skeletal soils on moderately steep sloping side slopes of hills with loamy surface having moderate erosion hazard and slight stoniness;	Loamy - Skeletal, Umbric Dystrochrepts	101.45	3.27
	associated with: Deep, well drained fine loamy soils on gently sloping side slopes of hills with moderate erosion hazard.	Fine - loamy, Typic Dystrochrepts		
16	Deep, excessively drained fine soils on gently sloping side slopes of hills with clayey surface having moderate erosion hazard and very slight stoniness;	Fine, Typic Paleudults	70.18	2.27
	associated with: Deep, well drained fine soils on gently sloping hill tops with severe erosion hazard and slight stoniness.	Fine - loamy, Typic Dystrochrepts		
18	Moderately deep, excessively drained, fine soils on steeply sloping hill tops having loamy surface with moderate erosion hazard;	Fine, Typic Dystrochrepts	308.43	9.96
	associated with: Moderately deep, somewhat excessively drained loamy skeletal sloping hill tops with moderate erosion hazards and slight stoniness.	Loamy - Skeletal, Pachic Haplumbret		
27	Deep, excessively drained fine loamy soils on moderately sloping side slopes of hills having loamy surface with moderate erosion hazard;	Fine -loamy, Typic Hapludults	73.18	2.36
	associated with: Moderately shallow somewhat excessively drained fine loamy soils on steeply sloping side slopes of hills having moderate erosion hazard and moderate stoniness.	Fine - Loamy, Umbric Dystrochrepts		
28	Moderately deep, somewhat excessively drained, loamy skeletal soils on steeply sloping side slopes of hills having loamy surface with moderate erosion hazard and very slight stoniness;	Loamy - skeletal, Typic Dystrochrepts	918.26	29.64
	associated with: Deep, somewhat excessively drained fine soils on moderately steep side slopes of hills with severe erosion and slight stoniness.	Fine - loamy, Typic Udorthents		
30	Deep, excessively drained, fine soils on moderately sloping side slopes of hills with clayey surface having moderate erosion hazard and slight stoniness;	Fine, Typic Dystrochrepts	196.74	6.35
	associated with: Moderately shallow, excessively drained loamy skeletal soils on moderately steep sloping side slopes of hills with severe erosion hazard and moderate stoniness.	Loamy - skeletal, Typic Dystrochrepts		
31	Deep, somewhat excessively drained, fine soils on moderately steep sloping hill slopes with clayey surface having moderate erosion hazard;	Fine, Pachic Haplumbrepts	19.73	0.64
	associated with: Moderately deep somewhat excessively drained fine soils on steeply sloping hill tops with severe erosion hazard and slight stoniness.	Fine, Typic Dystrochrepts		

Soil Unit	Description	Taxonomic Classification	Area (sq km)	Area (%)
32	Deep, somewhat excessively drained clayey skeletal soils on steeply sloping hill slopes having clayey surface with severe erosion hazard and strong stoniness;	Clayey - skeletal, Typic Dystrochrepts	40.57	1.31
	associated with: Moderately shallow, somewhat excessively drained fine soils on moderately sloping hill escarpments with moderate erosion hazard and slight stoniness.	Fine, Typic Dystrochrepts		
33	Deep, Excessively drained skeletal clayey - soils on steeply sloping hill slopes having clayey surface with moderate erosion hazard and slight stoniness;	Clayey - skeletal, Pachic Haplumbrepts	9.46	0.31
	associated with: Deep, excessively drained fine loamy soils on moderately steep sloping side hill slopes with severe erosion and moderate stoniness.	Fine - loamy, Typic Paleudults		
34	Moderately shallow, somewhat excessively drained fine soils on steeply sloping hill slopes having clayey surface with severe erosion hazard and moderate stoniness;	Fine, Pachic Haplumbrepts	854.34	27.58
	associated with: Deep, somewhat excessively drained fine soils on steeply sloping hill tops with moderate erosion hazards and slight stoniness.	Fine, Typic Haplohumults		
TOTAL			**3098.00**	**100**

2.2.1.4 Land use Pattern

Majority of the project district area i.e. 48.17% is covered by forest area, Net sown area covers 20.58%, Other uncultivated land excluding fallow land covers 12.64%, Fallow land covers 11.96% and the rest 6.61% of the project district area is not available for cultivation. The general land use pattern of the project area is given in **Table 2.3**.

Table 2.3: Land use Pattern of Project Districts

District			Longleng		Tuensang		Total	
			Area (sq km)	Area (%)	Area (sq km)	Area (%)	Area (sq km)	Area (%)
Reporting Area for LUS			1062		1722			
Classification of Reporting Area	Forests		512	48.21	829	48.14	**1341**	**48.17**
	Not Available for Cultivation	Area Under Non-Agricultural Uses	63	5.93	116	6.74	**179**	**6.43**
		Barren and Unculturable Land	2	0.19	3	0.17	**5**	**0.18**
	Other Uncultivated Land Excluding Fallow Land	Permanent Pasture and Other Grazing Land	-	-	-	-	**-**	**-**
		Land Under Misc. Tree Crops and Groves not Included in Net Area Sown	96	9.04	116	6.74	**212**	**7.61**

District			Longleng		Tuensang		Total	
			Area (sq km)	Area (%)	Area (sq km)	Area (%)	Area (sq km)	Area (%)
		Culturable Waste Land	67	6.31	73	4.24	**140**	**5.03**
	Fallow Land	Fallow Lands Other Than Current Fallows	110	10.36	125	7.26	**235**	**8.44**
		Current Fallow	45	4.24	53	3.08	**98**	**3.52**
	Net Area Sown		165	15.54	408	23.69	**573**	**20.58**
Total Area for Land Utilization			**1062**	**100**	**1722**	**100**	**2784**	**100**

Source: Land use statistics, Ministry of Agriculture, GOI, 2016-17

2.2.1.5 Landslide Vulnerability

Landslide hazard stands as the second geological hazard following earthquake (Li, et. al., 1999; the U.S. Geological Survey, 2000). The Food and Agriculture Organization of the United Nations (FAO) states that steep terrain, vulnerable soil, heavy rainfall and earthquake activities make large parts of Asia highly susceptible to landslides. An area of about 0.49 million sq.km out of the total area of India is vulnerable to landslide and about 0.098 sq.km of an area in Northeast India is vulnerable to landslide. Nagaland comes under highly affected landslide hazard class (**Figure 2.2**).

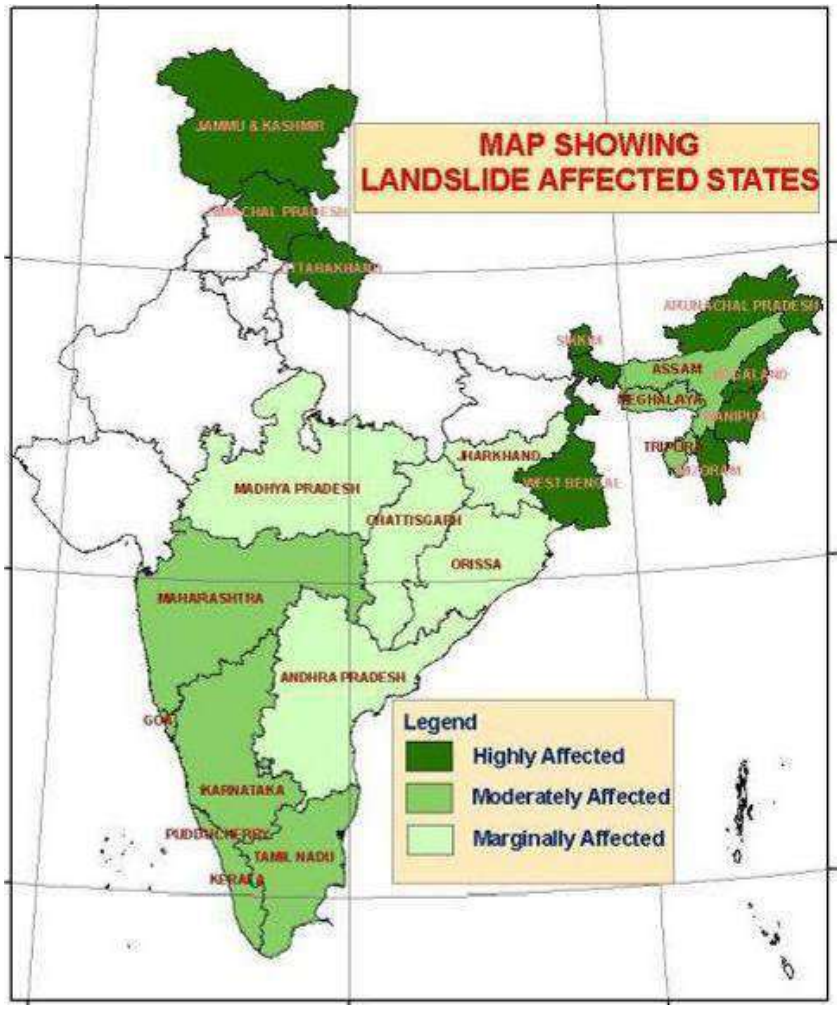

Figure 2.2: Landslide Map of India

Source: https://shodhganga.inflibnet.ac.in/bitstream/10603/220685/13/13_chapter%205.pdf

Landslide, a common phenomenon in hilly region is one of the most important factors of soil erosion. Topsoil and vegetative covers on large scale are considerably lost every year during the monsoon season. Landslides are mainly found below settlement areas, terrace fields, rolling Jhum land and road construction. The possible factors responsible for landslide occurrence may be singular or a combination of several factors. Some of the factors responsible for landslide in Nagaland are:

Soil formations: Clayey and shales have low hydraulic conductivity and can be difficult to drain. On the other hand, when the dip angle of the shale is along the slope, the soils over the shale are more susceptible to landslide. Most of the slides in the area are caused due to this reason. It is also observed that during rainy season the shallow soils lying above shale bed are prone to landslide.

Increase in the Runoff Volume: It affects the regimes of the natural downhill drains and toe cutting has been observed in many cases. Such toe cutting leads to slope failure near these natural drains. Slope failure occurring near these drains adversely affects the stability of the slope in general and leads to repeated slope failure in that area. Such toe failure also leads to blockage of drains promoting infiltration of water into the ground causing saturation of the soil, which adversely affects the stability. During the summer season, more specifically from June to October, the rainfall is heavy and almost continuous. So, permeable materials get saturated due to long continued heavy rains that, instead of the pelting rain driving individual particles in the form of 'rill' or 'rain-wash' down the slope, the whole of the surficial materials becomes a mass of mud and debris.

Faulty Road Construction: Another important factor causing landslides, it has aggravated the intensity of landslide. One of the main reasons for this is the slope cutting process while constructing the road as it disturbed the slope stability. Most of these slide areas remain weak with mud flow and sinking of highways occur every monsoon season due to the composition of loose sand and dark brown clays where water seepage are quite high.

Urbanization: Due to increasing urbanization and demand for land in the city area, and lack of enforcement of development controls, people have started construction even on the valley lines, completely blocking the drainage path in some cases. These drains need to cross the road system in several stages through culverts. Eroded soils and garbage carried down by water during torrential rainy season block many a time cross drains and lead to over flowing of water onto the road. Increasing urbanization has also increased the

surface runoff because extension in the pucca ground cover or black topping through the construction of building, courtyards, roads, pavements, etc., reduces infiltration of rainwater significantly and increases surface runoff, thereby increasing the volume and discharge in the area and drain which in turn remove the top soil rapidly and also cause landslide in the areas.

In the instant scheme, during construction limited quantity of excavated material is generated from tower/pole foundations and sub-station foundation. However, adequate mitigation measures have been given in the EMP and same are being undertaken to avoid any chances of landslide. In addition, excavation is avoided in rainy days. So far there are no instances of landslide due to any of the construction activity. Landslide due to operation and maintenance is not at all expected.

2.2.1.6 Erosion Vulnerability

Unscientific land utilization incompatible with its carrying capacity leads to land degradation which has both environmental and economic consequences. The information on land degradation is needed for a variety of purposes like planning reclamation programs, rational land use planning, for bringing additional areas into cultivation, to improve productivity levels in degraded lands etc. As per the land degradation mapping undertaken by Department of Space, GoI along with partner institutions under National Natural Resources Census (NRC), water and wind is the most important land degradation process that occurs on the surface of the earth. Rainfall, soil, physical properties, terrain slope, land cover and management practices play a very significant role in soil erosion. Some of the factors responsible for soil erosion in Nagaland are:

Sheet Erosion: It is a common problem resulting from loss of topsoil. The soil particles are removed from the whole soil surface on a fairly uniform basis in the form of thin layers. The severity of the problem is often difficult to visualize with naked eyes in the field.

Rill Erosion: When sheet erosion is severe and the surface runoff goes in the form of a concentric flow, tiny water channels are formed in the field called rills. Rills are generally associated with the cultivated lands and are visible in the ploughed soil after first heavy showers.

Gully Erosion: Gullies are formed as a result of localized surface run-off affecting the unconsolidated material resulting in the formation of perceptible channels causing undulating terrain. They are commonly found in sloping

lands, developed as a result of concentrated run-off over fairly long time. They are mostly associated with stream courses, sloping grounds with good rainfall regions and foothill regions.

Landslide/ Landslip Erosion: The region is quite prone to landslides/ landslips that take a heavy toll on valuable lands, property and life besides aggravating the problem of soil erosion. Factor responsible for landslide have already been explained in earlier section.

Faulty Road Construction: As explained in earlier section.

Unscientific Disposal of Debris Generated by Road Construction: Roads are the only means of communication and form an important development activity in the region. Road construction in the mountainous terrain requires a lot of blasting and construction in a zigzag fashion. The debris thus produced is not properly disposed at dumping sites and is just pushed onto the river side slopes. This results in heavy erosion during the rainy season.

Urbanization: As explained in earlier section.

For the assessment of soil erosion vulnerable hazard, route of proposed lines was superimposed over erosion map of Nagaland (refer **Figure 2.3**). The lines are no where near to soil erosion vulnerable hazard area. Further, adequate mitigation measures have been given in the EMP and same shall be followed to avoid any chances of getting affected by soil erosion vulnerable areas. In addition, any work is avoided in rainy days.

2.2.2 Biological Environment

It is pertinent to mention that, in the present project, forest area/land covered under Forest (Conservation) Act, 1980 has been completely avoided with careful selection of route alignment. Therefore, diversion of forest land is not involved in the project.

In order to analyze the impacts and plan mitigation measures, it is imperative to study baseline information for transmission line and surrounding or proximity area as well (study area), which includes forest areas under the control of individual/community/village councils. The same has been described in ensuing paragraphs.

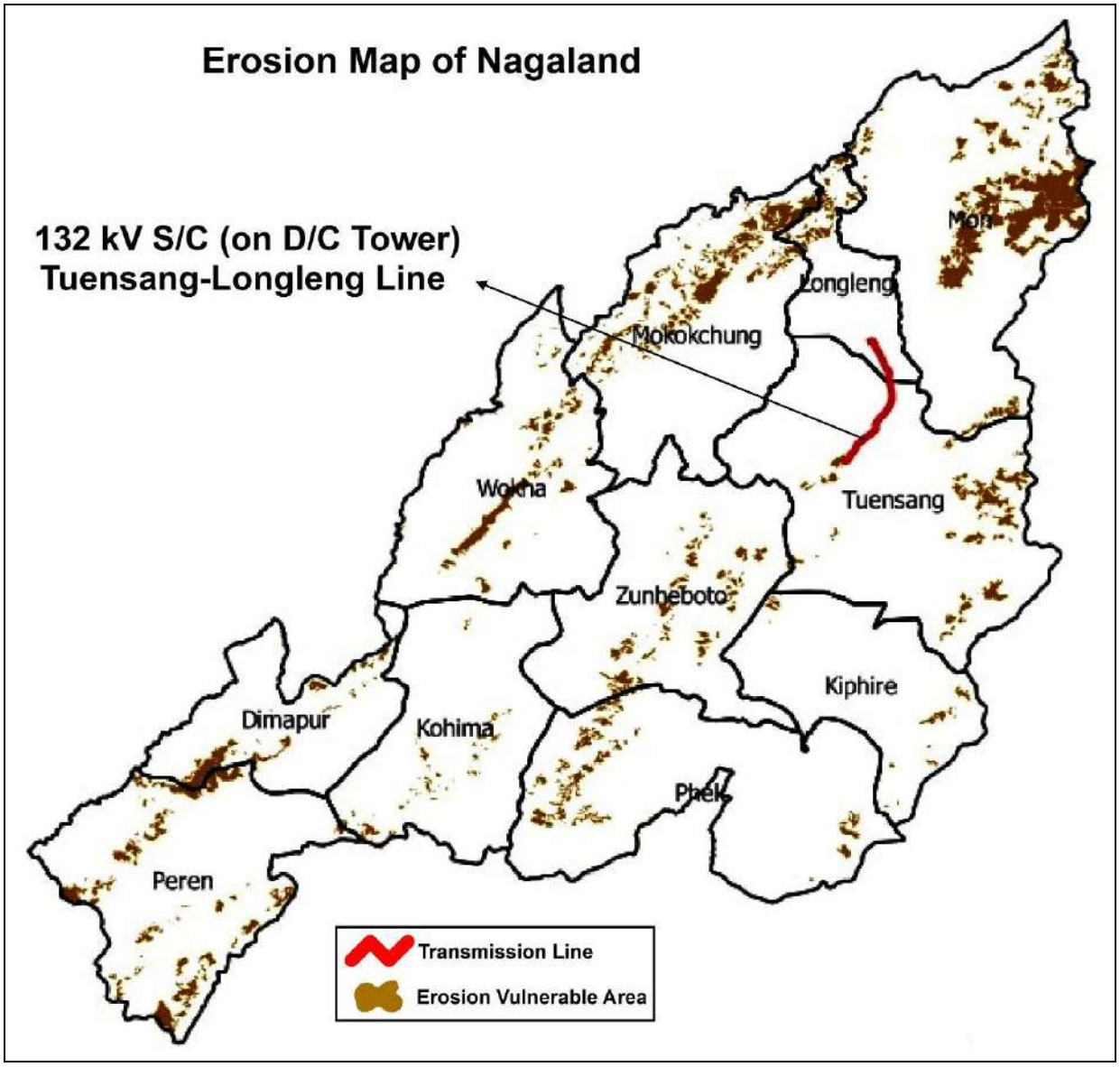

Figure 2.3: Erosion Vulnerable Area w.r.t. Sub-Project

2.2.2.1 Floristics

Though Nagaland is a small State, it has been endowed with a wide variety of forest types on account of its unique geographic location and wide range of physiographic terrain. As per the Champion & Seth Classification of Forest Types (1968), the forests in Nagaland belong to seven Type Groups, which are further divided into 10 Forest Types and Plantation/Tree Outside Forest (TOF). Percentage area under different forest types of Nagaland is given below in **Table 2.4**.

Table 2.4: Percentage Area under Different Forest Types of Nagaland

S. No.	Forest Type	% of Forest Cover
1	1B/C1 Assam Valley Tropical Wet Evergreen Forest (*Dipterocarpus*)	0.61
2	1/2S1 Pioneer Euphorbiaceous Scrub	4.30
3	2B/2S2 Eastern Alluvial Secondary Semi-Evergreen Forest	17.55

S. No.	Forest Type	% of Forest Cover
4	2/2S1 Secondary Moist Bamboo Brakes	5.09
5	3C/C3b East Himalayan Moist Mixed Deciduous Forest	38.44
6	8B/C2 Khasi Sub-Tropical Wet Hill Forest	16.09
7	9/C2 Assam Sub-Tropical Pine Forest	5.84
8	9/C2/DS1 Assam Subtropical Pine Savannah	0.17
9	11B/C2 Naga Hill Wet Temperate Forest	11.32
10	12/DS1 Montane Bamboo Brakes	0.07
11	Plantation/Tree Outside Forest (TOF)	0.52
	Total	**100**

Source: India State of Forest Report 2019, Nagaland

Forests in Nagaland are largely under the community and private forests. The Forest Department owns only certain areas classified as Reserved Forests, Protected Forests, Wildlife Sanctuaries, National parks, Nurseries & Botanical Gardens, therefore the department has purchased land from private owners for Biodiversity Conservation and taking up plantations. The total land purchased by the department is approximately 192.47 sq km. The State has started 'Joint Forest Management' program to elicit active participation of villagers in creation, management and protection of plantations. Intensification of Forest Management was carried out in the State by creating adequate infrastructure and controlling the incidences of forest fire.

Recorded Forest Area (RFA) in the State is 8,623 sq km of which 234 sq km is Reserved Forest and 8,389 sq km is Unclassed Forests. In Nagaland, during the period 1st January 2015 to 5th February 2019, no forest land was diverted for non-forestry purposes under the Forest Conservation Act, 1980 (MoEF&CC, 2019).

2.2.2.2 Forest Cover

As per the India State of Forest Report (ISFR), 2019, the forest cover in the State is 12,486.40 sq km which is 75.31 % of the State's geographical area. In terms of forest canopy density classes, the State has 1,273.19 sq km under Very Dense Forest (VDF), 4,533.72 sq km under Moderately Dense Forest (MDF) and 6,679.49 sq km under Open Forest (OF). Forest cover map of Nagaland is given below in **Figure 2.4**.

Total forest cover in the project districts is 2072.06 sq km, which is 66.88 % of the project district's geographical area. In terms of forest canopy density classes, the project districts have 438.57 sq km under VDF, 672.55 sq km under MDF and 960.94 sq km under OF. The details of forest cover of sub-project districts are given below in **Table 2.5** and **Figure 2.5**.

Table 2.5: Forest Cover in Project Districts

S. No.	Name of District	Geographical Area (GA)	2019 Assessment				% of GA
			Very Dense Forest	Moderately Dense Forest	Open Forest	Total Area	
1	**Longleng**	562	0	125.45	246.95	**372.4**	**66.26**
2	**Tuensang**	2536	438.57	547.10	713.99	**1699.66**	**67.02**
		3098	**438.57**	**672.55**	**960.94**	**2072.06**	**66.88**

Source: India State of Forest Report 2019, Nagaland

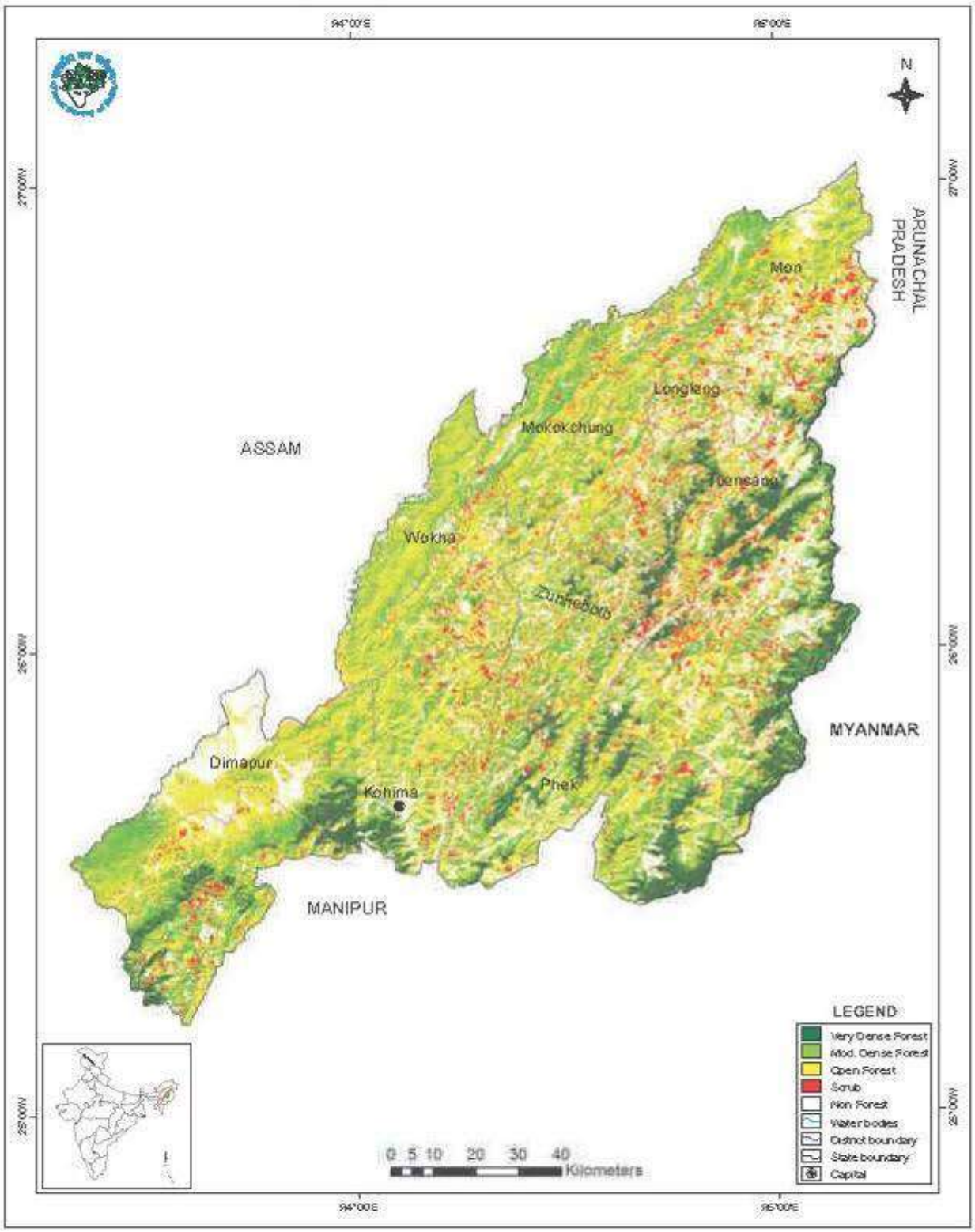

Figure 2.4: Forest Cover Map of Nagaland

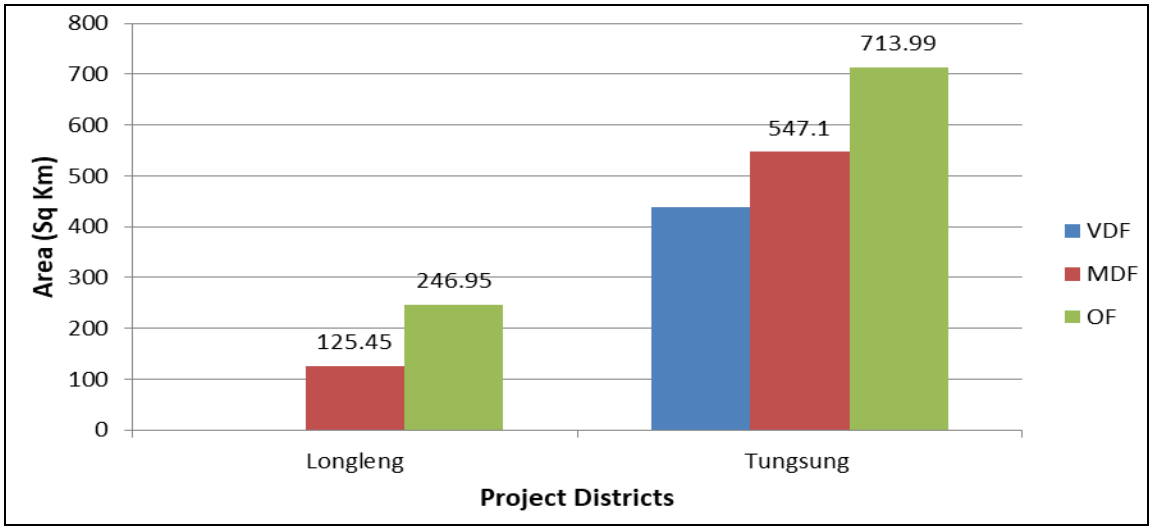

Figure 2.5: Forest Cover in Project Districts

2.2.2.3 Forest Cover inside and outside Recorded Forest Area (or Green Wash)

The State has reported extent of recorded forest area (RFA) 8,623 sq km which is 52.01% of its geographical area. The reserved and unclassed forests are 2.71% and 97.29% of the recorded forest area in the State, respectively. Due to non-availability of digitized boundary of recorded forest areas from the State, the updated Green Wash from SoI toposheets which is 10,633.44 sq km has been used as proxy to the RFA boundary and the analysis of forest cover inside and outside this area is given below in **Table 2.6**.

Table 2.6: Forest Cover inside and outside Recorded Forest Area or (Green Wash) in Nagaland

	Forest Cover inside the Recorded Forest Area (or Green Wash)				Forest Cover outside the Recorded Forest Area (or Green Wash)			
	VDF	MDF	OF	Total	VDF	MDF	OF	Total
Area (sq km)	1166	3279	4282	**8727**	107	1255	2397	**3759**
Area (%)	13.36	37.57	49.07	**100**	2.85	33.38	63.77	**100**

Source: India State of Forest Report 2019, Nagaland

2.2.2.4 Floristic Diversity

As per the rapid assessment of Biodiversity carried out by Forest Survey of India (FSI) at the national level for natural forests during September 2018 to May 2019 as part of the forest type mapping exercise in respect of Nagaland, total number of species reported in the state are 306, out of which 56 are tree species, 137 are shrub species and 113 are herb species. The Shannon-Wiener Index of Tree, Shrub and Herb species in different Type Groups of the state are given below in **Table 2.7**.

Table 2.7: Shannon-Wiener Index of Tree, Shrub and Herb species in different Type Groups of Nagaland

S. No.	Forest Type Group	Shannon-Wiener Index		
		Tree	Shrub	Herb
1	Group 1- Tropical Wet Evergreen Forests	*	3.09	2.81
2	Group 2- Tropical Semi-Evergreen Forests	2.15	2.97	2.35
3	Group 3- Tropical Moist Deciduous Forests	2.94	3.48	3.61
4	Group 8- Subtropical Broadleaved Hill Forests	2.62	3.40	2.92
5	Group 9- Subtropical Pine Forests	1.31	1.55	2.19
6	Group 11- Montane Wet Temperate Forests	1.04	1.17	1.90
7	Group 12- Himalayan Moist Temperate Forests	*	1.16	*

*Source: India State of Forest Report 2019, Nagaland; * adequate number of sample plots were not available*

2.3 STUDY AREA BASELINE DATA

2.3.1 Floristics Elements

The study area for the floristic surveys has already been defined in the Chapter 1 which is defined as area in the proximity of the proposed transmission lines on both left and right sides, corridors of transmission line routes and substations. The description of the vegetation is based upon these observations and data collected around each site collected through transects as already mentioned above.

In general, the vegetation in and areas around sampling sites is comprised of tropical wet evergreen and semi-evergreen floral elements. Therefore, field surveys for the assessment and composition of vegetation were conducted to assess the floral wealth in the proximity to the towers, sub-station and along the routes of transmission line.

A series of transects were identified along the routes of transmission line covering the corridors between the ROW of transmission line and substations. Details of transmission line and locations (transects) selected for phyto-sociological survey are as given in **Table 2.8.**

Table 2.8: Transmission Lines and Transects Locations for Vegetation Sampling

S. No.	Name of Transmission Line	Stretch Covered	Distance Covered
1	132 kV S/C (on D/C tower) Tuensang-Longleng line – 29.41 km	Longleng S/S - Tower 100 Tower 92 - Tower 90 Tower 83 – Tower 80 Tower 72 – Tower 67	Approx. 0.70 km Approx. 0.60 km Approx. 0.50 km Approx. 1.20 km

2.3.1.1 Taxonomic Diversity

Based upon the data collected during field surveys and data/information collected from secondary sources (Jamir, 1992; Eshuo, 2012, 2013; Moaakum and Chaturvedi, 2015; Leishangthem, 2018) inventory of 191 plant species found in the study area was prepared**.** Group-wise breakup of families, genera and species is given below.

Group	Angiosperms	Gymnosperms	Pteridophytes	Bryophytes	Total
Family	61	3	13	9	**86**
Genera	131	3	19	10	**163**
Species	155	3	22	11	**191**

A brief description of number of plant species recorded in various taxonomic groups is given in the following paragraphs.

a) Angiosperms

During the field surveys conducted in the study area 155 plant species of angiosperms belonging 61 families were recorded (For detailed list see **Appendix I**). These include trees, shrubs, herbs and climbers. Herbaceous component comprises of 65 species, shrubs are 32 and trees are comprised of 58 species. Most common families recorded from the study area are Poaceae, Moraceae, Araceae, Acanthaceae, Fabaceae, Euphorbiaceae, Urticaceae and Solanaceae.

b) Gymnosperms

Three species of gymnosperms recorded from the study area are:

S. No.	Family	Botanical name
1	Cupressaceae	*Platycladus orientalis* (Syn. *Thuja orientalis*)
2	Gnetaceae	*Gnetum montanum*
3	Pinaceae	*Pinus kesiya*

c) Pteridophytes:

During field survey 22 species belonging to 13 families of Pteridophytes were recorded from the area:

S. No.	Family	Botanical Name
1	Adiantaceae	*Adiantum philippense*
2	Adiantaceae	*Adiantum caudatum*
3	Aspleniaceae	*Aspwnium nidus*
4	Botrychiaceae	*Botrychium* sp.
5	Cyathiaceae	*Cyathia spinulosa*
6	Gleicheniaceae	*Dicranopteris linearis*
7	Lindsaeaceae	*Sphenomeris chinensis*
8	Lycopodiaceae	*Lycopodium* sp.

S. No.	Family	Botanical Name
9	Lygodiaceae	*Lygodium flexuosum*
10	Osmundaceae	*Osmunda regalis*
11	Polypodiaceae	*Polypodium* sp.
12	Polypodiaceae	*Lepisorus excavats*
13	Polypodiaceae	*Lepisorus sordidus*
14	Polypodiaceae	*Lepidogramatis rostrata*
15	Polypodiaceae	*Pyrrosia lingua*
16	Polypodiaceae	*Drymoglossum* sp.
17	Polypodiaceae	*Arthrometris* sp.
18	Pteridaceae	*Pteridium aquilinum*
19	Pteridaceae	*Pteris vittata*
20	Pteridaceae	*Pteris quadriaurita*
21	Selaginaceae	*Selaginella* sp.
22	Sinopteridaceae	*Onychium siliculosum*

d) Bryophytes

Eleven species belonging to 9 families of Bryophytes were recorded from the study area as follows.

S. No.	Family	Botanical Name
1	Jubulaceae	*Frullania wallachiana*
2	Lejeuneaceae	*Lejeunea curviloba*
3	Marchantiaceae	*Dumortiera hirsuta*
4	Marchantiaceae	*Marchantia linearis*
5	Marchantiaceae	*Marchantia papiliata*
6	Metzgeriaceae	*Metzgeria lindenbergii*
7	Pelliaceae	*Pellia endiviifolia*
8	Plagiochilaceae	*Plagiochila subtropica*
9	Ricciaceae	*Ricciocarpos natans*
10	Targioniaceae	*Targionia hypophylla*
11	Weisnerellaceae	*Wiesnerella denudata*

2.3.1.2 Rare Endangered and Threatened (RET) Species

Conservation status of plant species found in the study area was assessed using IUCN Red list of Threatened Species Version 2020.1 (accessed in February 2020) and Botanical Survey of India Red Data Book. None of the plant species falls under any category of Red Data Book by BSI.

Majority of the species have not been evaluated or assessed yet by IUCN (2020.1) and only 29 species have been assessed (**Table 2.9**) and all them fall under 'Least Concern' (LC) category, 1 species under Data Deficient (DD) category.

Table 2.9: RET plant species reported from study area

Family	Name of species	IUCN 2020.1
Anacardiaceae	*Mangifera indica*	DD
Anacradiaceae	*Mangifera sylvatica*	LC
Anacradiaceae	*Rhus chinensis*	LC
Apiaceae	*Centella asiatica*	LC
Arecaceae	*Caryota urens*	LC
Betulaceae	*Alnus nepalensis*	LC
Commelinaceae	*Commelina benghalensis*	LC
Cyperaceae	*Cyperus iria*	LC
Cyperaceae	*Cyperus rotundus*	LC
Fabaceae	*Mimosa pudica*	LC
Fabaceae	*Acacia pennata*	LC
Fabaceae	*Bauhinia purpurea*	LC
Fabaceae	*Bauhinia variegata*	LC
Fabaceae	*Erythrina variegata*	LC
Juglandaceae	*Engelhardtia spicata*	LC
Magnoliaceae	*Magnolia champaca*	LC
Meliaceae	*Chukrasia tabularis*	LC
Musaceae	*Musa acuminata*	LC
Pandanaceae	*Pandanus odorifer*	LC
Poaceae	*Phragmites karka*	LC
Poaceae	*Poa annua*	LC
Poaceae	*Dendrocalamus giganteus*	LC
Poaceae	*Saccharum spontaneum*	LC
Polygonaceae	*Polygonum persicaria*	LC
Polygonaceae	*Polygonum pubescens*	LC
Simaroubaceae	*Ailanthus integrifolia*	LC
Solanaceae	*Physalis minima*	LC
Theaceae	*Schima wallichii*	LC
Urticaceae	*Urtica dioica*	LC

2.3.1.3 Invasive Species and Their Control

An invasive plant is a non-native plant that is able to persist and proliferate outside of cultivation, resulting in ecological and/or economic harm. Once established in these areas, invasive plants often continue to spread to adjacent habitats. All invasive plant species are aggressive competitors with the ability to significantly reduce diversity of native plant and also disturb & alter wildlife habitat. As per ISFR, 2019, there are four invasive species in Nagaland, *Parthenium hysterophorus*, *Ageratum conyzoides, Mikania micrantha* and *Chromolaena odorata.* Beside these four species *Lantana camara* is another invasive species reported from all the over the state.

During the field survey, along the route of transmission line *Ageratum conyzoides* is the only non-indigenous species recorded from the study area. However, as per literature review, paste of green leaves of *Ageratum*

conyzoides is used for cuts & sores and paste of roots is used as anthelmintic or anti- allergic.

The presence of large number of invasive plant species is indicative of degradation of vegetation in the study area i.e. transects studied along the different transmission lines, their routes and substations. This has happened mainly due to jhumming activities prevalent in the area.

The newly disturbed ground is prime habitat for more invasive species to colonize. A protective approach is required for eliminating or control the spread and establishment of invasive plants species, for which there are two key elements. First, project authorities would ensure to uproot all existing alien/invasive species from the labour colony and other working areas. Secondly, project workers will be discouraged to plant any alien and/or invasive species in the camp and colony areas, which may spread in the forest areas. Eliminating the invasive species by uprooting or pulling is laborious but may be the best choice for on steep or rough terrain. Replanting the area immediately with a desirable selection of native plants is necessary.

There must be an emphasis on early detection and eradication of these invasive species populations in the area especially the new population. To control and check the growth of invasive species, plantation of indigenous species in the area occupied by invasive species is also necessary. The other factor that helps in control of non-indigenous species is the increase of knowledge and awareness among the workers and villagers.

In the present project, none of the project activity contribute in the growth of any invasive species.

2.3.1.4 Vegetation Profile Along the Route of Transmission Line

Site 1:– Between tower 67-72 & tower 80-83

The route of proposed transmission line varies about 600 m to 900 m amsl. The area along the corridor of proposed transmission line is mainly categorised under dense and scrub forest. Some of the towers are located on agricultural/ jhum land near habitation.

Important tree of the top storey include *Albizia chinensis*, *Artocarpus chaplasha*, *Aesculus assamica*, *Bischofia javanica*, *Chukrassia tabularis*, *Duabanga grandiflora*, *Garuga pinnata*, *Terminalia myriocarpa*, *Toona hexandra*, etc. In addition to these trees, some patches of wild banana (*Musa*

acuminata) and tree fern (*Cyathea spinulosa*) are also found in shaded and damp areas. The vegetation of slopes on the higher elevations is comprised of tall bamboos, however, bamboos often form dense thickets in the under storey of the forests also. Other some important trees and shrubs of the second storey were *Brassiopsis mitis*, *Calamus scandens*, *Clerodendrum indicum*, *Eupatorium odoratum* and *Mesua ferrea.* Good abundance of ferns like *Dicranpoteris linearis*, *Lepisorus excavatus, Pteris quadriaurita* and *Pteridium aquilinum* and several epiphytic orchids are found in these forests. Herbaceous flora is represented by *Ageratum conyzoides*, *Achyranthes bidentata*, *Bidens pilosa*, *Cynotis vaga*, *Eupatorium odoratum*, *Elatostemma sessile*, *Mimosa pudica*, *Oxalis corniculata,* etc. Some tall grasses like *Arundinaria callosa*, *Saccharum spontaneum* and *Thysanolaena maxima* are also found all along the slopes in the route of transmission line and around location of towers. However, vast stretches of land are subjected to slash and burn i.e. jhuming activity leading to secondary nature of the vegetation throughout the area.

Forest cover along the route

Jhum land in the route

Transect Survey along the route

Site 2:– Between tower 90-92; & tower 100-Substation

The important constituents of the vegetation here are *Alnus nepalensis, Duabanga grandiflora, Bauhinia purpurea* and *Pandanus odorifer, Artocarpus heterophyllus, Cinnamomum bejolghota, Ficus semicordata* and *Macaranga denticulata.* The shrub elements are composed of species like *Thysanolaena maxima, Arundinaria hirsute, Musa itinerans, Phlogacanthus tubiflorus, Calamus floribundus, Strobilanthes coloratus, Trevesia palmata, Saccharum spontaneum*.

Ground vegetation abounds in rich diversity of herbs, comprising a variety of terrestrial ferns and grasses species like *Pteridium aquilinum, Ageratum conyzoides* and *Cynodon dactylon, Polygonum persicaria, Cyperus rotundus, Elatostema sessile, Ageratum conyzoides, Oxalis corniculata, Elatostema sessile, Cyperus iria, Cynoglossum glochidiatum, Oxalis corniculata, Begonia nepalensis* and *Euphorbia hirta, Poa annua, Fagopyrum esculentum,* etc.

Few patches of Assam pine (*Pinus kesiya*) are seen extending towards higher hills in the area.

Forest cover between towers 90-92

Transect Survey between towers 90-92

Abandoned Jhum land between towers 90-92

2.3.1.5 Economically Important Plant Species

The people of the area use wild plants in their daily life as food, medicine, fiber, fodder, fuel wood, timber, vegetables, fruits and various minor forest products. Agriculture is the major occupation in the project area and jhum cultivation is prevalent. Jhum paddy, WRC paddy, maize, soybean, and rapeseed/mustard are main crops cultivated. Among horticultural crops are pineapple, banana, orange, passion fruit and litchi. Among vegetable chili, colocasia, leafy vegetables, tapioca, pumpkin and ginger are common.

Wild Edible Plants

List of wild edible plants used by villagers in the study area was prepared from Pradheed *et al.* (2016) and the same is given at **Table 2.10**.

Table 2.10: Wild edible plant species used for tribes in study area

S. No.	Family	Name of species	Parts used
1	Anacardiaceae	*Rhus chinensis*	Fruit
2	Apiaceae	*Centella asiatica*	Leafy vegetable
3	Apiaceae	*Eryngium foetidum*	Leafy vegetable
4	Araceae	*Colocasia esculenta*	Leafy vegetable
5	Arecaceae	*Calamus tenuis*	Fruit
6	Burseraceae	*Canarium strictum*	Fruit

S. No.	Family	Name of species	Parts used
7	Chenopodiaceae	*Chenopodium album*	Leafy vegetable
8	Fabaceae	*Bauhinia variegata*	Flower bud
9	Moraceae	*Artocarpus chama*	Fruit
10	Moraceae	*Ficus auriculata*	Fruit
11	Phyllanthaceae	*Phyllanthus emblica*	Fruit
12	Rutaceae	*Zanthoxylum retusum*	Leafy vegetable
13	Solanaceae	*Solanum* sp.	Unripe Fruit
14	Urticaceae	*Lecanthus peduncularis*	Leafy vegetable

Nagaland state is famous for Naga Mircha/Bhut Jolokia (*Capsicum chinense*) known as world's hottest chili, tree tomato (*Solanum betaceum*) consumed as vegetable and Naga pineapple (*Ananas comosus*).

Medicinal Plants

Plant species are used for various medicinal purposes for treating various ailments by local tribal. The list of plant species used for various medicinal purposes by locals and found in the study area was prepared from Imchen & Jamir, 2011; Jamir & Tsurho, 2016 and the same is given at **Table 2.11**.

Table 2.11: Plant Species Used for Medicinal Purposes

S. No.	Family	Name of species	Parts used	Disease/ailment treated
1	Amaranthaceae	*Achyranthes aspera*	Entire plant	Diuretic
2	Amaranthaceae	*Amaranthus spinosus*	Leaves, inflorescence	Weak womb in women
3	Amaranthaceae	*Celosia argentea*	Flower	Gastric problems
4	Anacardiaceae	*Mangifera indica*	Leaves	Jaundice, stomach ache
5	Apiaceae	*Centella asiatica*	Entire plant	Cough, malaria; improves hair growth
6	Apiaceae	*Coriandrum sativum*	Aerial part	Blood purifier; indigestion
7	Apocynaceae	*Alstonia scholaris*	Seeds	Constipation
8	Apocynaceae	*Catharanthus roseus*	Leaves, flower	Cancer, diabetes
9	Araceae	*Alocasia macrorrhiza*	Leaves, roots	Inflammatory diseases; a vermifuge
10	Araceae	*Arisaema tortuosum*	Roots, seeds	Gastritis, indigestion
11	Araceae	*Colocasia esculenta*	Leaves, stem, rhizome	Vermifuge, laxative
12	Araceae	*Lasia spinosa*	Aerial part	Anthelmintic
13	Arecaceae	*Areca catechu*	Seeds	A vermifuge
14	Asparagaceae	*Asparagus racemosus*	Root	Diabetes, epilepsy
15	Asteraceae	*Ageratum conyzoides*	Leaves, roots	Leaves in cuts & sores; roots anthelmintic, anti-allergic
16	Asteraceae	*Artemisia indica*	Stem	Soothing sore throat; a source of vitamin
17	Asteraceae	*Artemisia nilagirica*	Entire plant	Appetizer, source of

S. No.	Family	Name of species	Parts used	Disease/ailment treated
				vitamin; in dog bites
18	Asteraceae	*Mikania cordata*	Leaves, stem	Insect bites, itches, wounds; stops bleeding
19	Asteraceae	*Spilanthes acmella*	Inflorescence	Toothache; germicidal
20	Asteraceae	*Tagetes erecta*	Leaves	Headache, boils, muscular pain
21	Begoniaceae	*Begonia palmata*	Leaves	A febrifuge
22	Cannaceae	*Canna indica*	Leaves	Treats toothache along with Solanum myriacanthum
23	Caryophyllaceae	*Drymaria cordata*	Leaves	Snake and insect bites, sinus problem
24	Costaceae	*Cheilocostus speciosus*	Stem	Jaundice, headache, fever; a germicide
25	Crassulaceae	*Bryophyllum pinnata*	Leaves	Wounds, insect bites, gall bladder stone
26	Dioscoreaceae	*Dioscorea bulbifera*	Tubers	Piles, dysentery
27	Equisetaceae	*Equisetum ramosissimum*	Entire plant	Rheumatic pain, hair
28	Euphorbiaceae	*Euphorbia royleana*	Latex	Toothache, burns
29	Euphorbiaceae	*Jatropha curcas*	Branch stem	Used for brushing during toothache
30	Euphorbiaceae	*Ricinus communis*	Leaves	Rheumatic body parts, blood clotting, bone fracture
31	Fabaceae	*Albizia chinensis*	Bark	Bark paste is wrapped around injured part that supports as bandage
32	Fabaceae	*Albizia lebbeck*	Leaves, seeds	Improves womb weakness
33	Fabaceae	*Bauhinia glauca*	Roots	Problems of womb in women
34	Fabaceae	*Crotalaria pallida*	Leaves, bark	Jaundice
35	Fabaceae	*Mimosa pudica*	Leaves	Wounds, insects bites, jaundice, urinary problem
36	Hypoxidaceae	*Curculigo orchioides*	Rhizome	Gastric problem & venereal diseases
37	Lamiaceae	*Elsholtzia blanda*	Leaves	Stomach-ache, nervous tension, constipation
38	Lamiaceae	*Ocimum basilicum*	Leaves	Cough, skin diseases, insect stings
39	Malvaceae	*Gossypium arboreum*	Seeds	Measles, allergies; refrigerant
40	Malvaceae	*Hibiscus rosa-sinensis*	Leaves	Dysentery, gastric problems, indigestion
41	Meiaceae	*Azadirachta indica*	Leaves	Heart problems
42	Moraceae	*Artocarpus heterophyllus*	Seeds, bark	Cancer, asthma
43	Moraceae	*Ficus altissima*	Fruits	Appetizer

S. No.	Family	Name of species	Parts used	Disease/ailment treated
44	Moraceae	*Ficus carica*	Fruits	Womb tumour
45	Musaceae	*Musa paradisiaca*	Latex	Dysentery
46	Myrtaceae	*Psidium guajava*	Leaves	Dysentery; germicidal
47	Oxalidaceae	*Oxalis corniculata*	Entire plant	Jaundice, dysentery, diarrhoea
48	Phyllanthaceae	*Phyllanthus emblica*	Fruits	Cough; source of vitamin improving eye sight
49	Piperaceae	*Piper betle*	Leaves	As antiseptic in cuts and wounds; cough
50	Poaceae	*Bambusa tulda*	Shoot	Piles
51	Pteridaceae	*Adiantum lunulatum*	Aerial part	Fever, dysentery, malaria
52	Rosaceae	*Fragaria nilgerrensis*	Fruits	Source of vitamin
53	Rutaceae	*Citrus limon*	Leaves, seeds	Headache, dysentery
54	Solanaceae	*Brugmansia suaveolens*	Leaves	Weak memory
55	Solanaceae	*Nicotiana tabacum*	Seeds	Cough, fever
56	Solanaceae	*Solanum myriacanthum*	Seeds	Toothache; germicidal
57	Zingiberaceae	*Curcuma aeruginosa*	Rhizome	Tuberculosis, cancer
58	Zingiberaceae	*Curcuma angustifolia*	Rhizome	Body ache, swelling body parts, cuts & wounds
59	Zingiberaceae	*Zingiber officinale*	Rhizome	Rheumatic pain, womb tumor

Source: Imchen & Jamir, 2011; Jamir & Tsurho, 2016

Timber yielding Tree species

Some of the timber yielding trees found in the study area are *Albizia procera*, *Actinodaphne obovata*, *Chukrasia tabularis*, *Magnolia champaca*, *Schima wallichii*, *Terminalia myriocarpa*, *Artocarpus heterophyllus* and *Mangifera sylvatica*.

2.3.2 Faunal Elements

While describing the faunal diversity in Nagaland, it would be imperative to address the ethnic composition, and their rights and privileges on forests. Forests in Nagaland are largely under the community and private forests. The tribes of the region are closely associated with the forest resources not only for their livelihood.

But on the other hands, hunting is considered as a serious activity among the tribal community in Nagaland, therefore, many rituals are performed for the successful hunting. Hunting and trapping of mammals and birds and slash and burn practice (shifting cultivation) are common phenomena in the state, which are one of the major threats to the biodiversity; therefore scientists and ecologists have been highlighting their consequences on biodiversity for

long back. Deforestation for shifting cultivation and hunting practices in the state are resulting in degradation of wildlife habitat.

To study the wild mammalian fauna of the study area, transects and trails were walked on same transects used for floral survey. During the field surveys, not a single species was encountered during the transect walk. As informed by the local people, the wild mammals are found in upper reaches having dense forests and have not human interference. Due to large number of illegal hunting of these animals for the meat, medicine and other use like home decoration etc. the number of mammal's species was decreases gradually in the area and they are seen very occasionally.

Therefore, the fauna of the state has been compiled with the help of secondary sources. Data was compiled from published literature of National Biodiversity Strategy and Action Plan (NBSAP) and Zoological Survey of India (ZSI). Nagaland harbours a variety of wildlife distributed throughout the state. For management and preservation of wildlife in the State, the Department of Forests, Environment & Ecology and Wildlife has a full-fledged wildlife Wing under the Chief Wildlife Warden.

2.3.2.1 Mammals

As per the data compiled, 28 species of mammals belonging 17 families of 8 orders are reported from the project districts. As per the International Union for Conservation of Nature (IUCN) Red List of Threatened Species, 2019-3, 5 species are in Endangered (EN) category, 5 species are in Vulnerable (VU) category, 4 species are in Near Threatened (NT) category, 12 species are in Least Concerned (LC) category and 2 species were Not Assessed (NA). List of important mammals found in the project districts along with their conservation status is given in **Table 2.12.**

Table 2.12: List of Mammals

S. No.	Family	Scientific Name	Common Name	Conservation Status (IUCN 2020.1)
	Order-Artiodactyla			
1	Bovidae	*Bos frontalis*	Mithun	NA
2	Bovidae	*Nemorhaedus goral*	Goral	NT
3	Suidae	*Sus scrofa*	Wild Boar	LC
	Order- Carnivora			
4	Felidae	*Panthera tigris*	Tiger	EN
5	Felidae	*Panthera pardus*	Leopard or Panther	VU
6	Felidae	*Felis bengalensis*	Leopard Cat	LC
7	Mustelidae	*Arctonyx collaris*	Hog-badger	VU
8	Canidae	*Cuon alpinus*	Wild Dog	EN

S. No.	Family	Scientific Name	Common Name	Conservation Status (IUCN 2020.1)
9	Ursidae	*Malursus urinus*	Sloth Bear	VU
10	Mustelidae	*Lutra lutra*	Common Otter	NT
11	Felidae	*Felis chatus*	Jungle Cat	LC
12	Herpestidae	*Herpestes edwadsii*	Mongoose	LC
13	Canidae	*Vulpes bengalensis*	Indian Fox	LC
14	Mustelidae	*Martes foina intermedia, M. flavigula*	Martins	LC
15	Viverridae	*Paradoxums hermophroditus*	Tody Cat	LC
	Order-Cetartiodactyla			
16	Cervidae	*Muntiacus muntjak*	Barking Deer	LC
17	Cervidae	*Cervus unicolor*	Sambar	VU
	Order- Lagomorpha			
18	Leporidae	*Lepus nigricollis*	Common Hare	LC
	Order- Pholidota			
19	Manidae	*Monis crassicaudata*	Pangolin	EN
	Order- Primates			
20	Hylobatidae	*Hylobates hoolock*	Hoolock	EN
21	Lorisidae	*Nycticebus coucang*	Slow Lorris	VU
22	Cercopithecidae	*Macaca assamensis*	Assamese Macaque	NT
23	Cercopithecidae	*Canis aureus*	Jackal	NT
	Order- Proboscidea			
24	Elephantidae	*Elephas maximus*	Elephant	EN
	Order- Rodentia			
25	Sciuridae	*Petuarista petuarista*	Giant Flying Squirrel	LC
26	Hystricidae	*Hystrix indica*	Porcupine	LC
27	Sciuridae	*Ratufa indica*	Indian Giant Squirrel	LC
28	Sciuridae	*Ratufa bicolor*	Black Giant Squirrel	NA

Source: NBSAP & ZSI; Bhupathy et al. (2011)

2.3.2.2 Avifauna

As per the data compiled, 86 species of avifauna belonging 40 families of 15 orders are reported from the project districts. As per the IUCN Red List of Threatened species, 2020-1, 1 species is in Critically Endangered (CR) category, 1 species is in VU category, 3 species are in NT category and 81 species are in LC category. List of important avifauna found in the project districts along with their conservation status is given in **Table 2.13.**

Table 2.13: List of Avifauna

S. No.	Order/ Family	Scientific Name	Common Name	Conservation Status (IUCN 2020.1)
	Accipitriformes			
1	Accipitridae	*Gyps himalayensis*	Himalayan Griffon	NT
2	Accipitridae	*Milvus migrans*	Black Kite	LC
	Anseriformes			

S. No.	Order/ Family	Scientific Name	Common Name	Conservation Status (IUCN 2020.1)
3	Anatidae	*Anas crecca*	Common Teal	LC
	Apodiformes			
4	Apodinae	*Aerodramus brevirostris*	Himalayan Swiftlet	LC
5	Apodidae	*Apus affinis*	Little swift	LC
6	Apodidae	*Apus nipalensis*	House Swift	LC
	Bucerotiformes			
7	Bucerotidae	*Buceros bicornis*	Great Hornbill	VU
8	Bucerotidae	*Ocyceros birostris*	Indain Grey Hornbill	LC
9	Upupidae	*Upupa epops*	Eurasian hoopoe	LC
	Caprimulgiformes			
10	Caprimulgidae	*Caprimulgus asiaticus*	Indian nightjar	LC
	Charadriiformes			
11	Charadriidae	*Vanellus indicus*	Red-wattled lapwing	LC
12	Scolopacidae	*Gallinago gallinago*	Common snipe	LC
13	Scolopacidae	*Tringa hypoleucos*	Common Sandpiper	LC
	Columbiformes			
14	Columbidae	*Columba livia*	Rock Pigeon	LC
15	Columbidae	*Ducula badia*	Mountain Imperial-Pigeon	LC
16	Columbidae	*Streptopelia chinensis*	Spotted Dove	LC
17	Columbidae	*Streptopelia orientalis*	Oriental Turtle Dove	LC
18	Columbidae	*Treron phoenicoptera*	Yellow-footed green pigeon	LC
	Coraciiformes			
19	Alcedinidae	*Alcedo atthis*	Common kingfisher	LC
20	Coraciidae	*Coracias benghalensis*	Indian Roller	LC
21	Meropidae	*Merops orientalis*	Green bee-eater	LC
	Cuculiformes			
22	Phasianidae	*Arborophila torqueola*	Hill Partridge	LC
23	Cuculidae	*Centropus bengalensis*	Lesser Coucal	LC
24	Cuculidae	*Centropus sinensis*	Great Coucal	LC
25	Cuculidae	*Eudynamys scolopaceus*	Asian Koel	LC
	Falconiformes			
26	Falconidae	*Falco amurensis**	Amur falcon	LC
	Galliformes			
7	Ardeidae	*Ardea Cinerea*	Grey Heron	LC
28	Ardeidae	*Bubulcus ibis*	Cattle Egret	LC
29	Corvidae	*Corvus splendens*	House crow	LC
30	Phasianidae	*Lophura leucomelanos*	Kalij Pheasant	LC
31	Phasianidae	*Syrmaticus humiae*	Mrs Hume's Pheasant	NT
32	Phasianidae	*Ophrysia superciliosa*	Himalayan Quail	CR
33	Phasianidae	*Gallus gallus*	Red Jungle Fowl	LC
34	Phasianidae	*Polyplectron bicalcaratum*	Grey Peacock-pheasant	LC
35	Phasianidae	*Coturnix coturnix*	Common Quail	LC
36	Odontophoridae	*Oreortyx pictus*	Mountain Quail	LC
	Passeriformes			

S. No.	Order/ Family	Scientific Name	Common Name	Conservation Status (IUCN 2020.1)
37	Campephagidae	*Pericrocotus speciosus*	Scarlet Minivet	LC
38	Corvidae	*Dendrocitta formosae*	Gray Treepie	LC
39	Corvidae	*Dendrocitta vagabunda*	Rufous Treepie	LC
40	Corvidae	*Urocissa erythroryncha*	Yellow-billed Blue Magpie	LC
41	Emberizidae	*Emberiza fucata*	Chestnut-eared Bunting	LC
42	Emberizidae	*Melophus lathami*	Crested Bunting	LC
43	Leiothrichidae	*Heterophasia capistrata*	Rufous sibia	LC
44	Leiothrichidae	*Turdoides caudatus*	Common Babbler	LC
45	Monarchidae	*Streptopelia senegalensis*	Paradise flycatcher bird	LC
46	Monarchidae	*Terpsiphone paradisi*	Indian Paradise-flycatcher	LC
47	Motacillidae	*Motacilla alba*	White wagtail	LC
48	Muscicapidae	*Chaimarrornis leucocephalus*	White-capped Water Redstart	LC
49	Muscicapidae	*Copsychus malabaricus*	White-rumped shama	LC
50	Muscicapidae	*Copsychus saularis*	Oriental Magpie Robin	LC
51	Muscicapidae	*Enicurus maculatus*	Spotted Forktail	LC
52	Muscicapidae	*Myophonus caeruleus*	Blue Whistling Thrush	LC
53	Muscicapidae	*Rhyacornis fuliginosus*	Plumbeous Water Redstart	LC
54	Nectariniidae	*Aethopyga siparaja*	Crimson sunbird	LC
55	Paridae	*Parus major*	Great Tit	LC
56	Passeridae	*Dendronanthus indicus*	Forest Wagtail	LC
57	Passeridae	*Motacilla cinerea*	Grey Wagtail	LC
58	Passeridae	*Motacilla flava*	Yellow Wagtail	LC
59	Passeridae	*Motacilla maderaspatensis*	White-Browed Wagtail	LC
60	Passeridae	*Passer domesticus*	House Sparrow	LC
61	Phasianidae	*Tragopan blythii*	Blyth's Tragopan	LC
62	Phylloscopidae	*Phylloscopus fuscatus*	Dusky Warbler	LC
63	Picidae	*Dendrocopos mahrattensis*	Yellow Crowned Woodpecker	LC
64	Pnoepygidae	*Pnoepyga albiventer*	Scaly-breasted Cupwing	LC
65	Pnoepygidae	*Pnoepyga pusilla*	Pygmy Cupwing	LC
66	Pycnonotidae	*Hypsipetes leucocephalus*	Black Bulbul	LC
67	Pycnonotidae	*Hypsipetes madagascariensis*	Madagascar bulbul	LC
68	Pycnonotidae	*Pycnonotus cafer*	Red-Vented Bulbul	LC
69	Pycnonotidae	*Pycnonotus jocosus*	Red-whiskered bulbul	LC
70	Pycnonotidae	*Pycnonotus leucogenys*	Himalayan Bulbul	LC
71	Pycnonotidae	*Pycnonotus melanicterus*	Black-crested Bulbul	LC
72	Pycnonotidae	*Pycnonotus striatus*	Striated Bulbul	LC
73	Stenostiridae	*Culicicapa ceylonensis*	Grey-headed Canary-	LC

S. No.	Order/ Family	Scientific Name	Common Name	Conservation Status (IUCN 2020.1)
			Flycatcher	
74	Sturnidae	*Acridotheres tristis*	Common Myna	LC
75	Sturnidae	*Gracula religiosa*	Hill Myna	LC
76	Timaliidae	*Mixornis gularis*	Pin-striped Tit-Babbler	LC
77	Turdidae	*Turdus merula*	Common blackbird	LC
	Pelecaniformes			
78	Dicruridae	*Dicrurus adsimilis*	Fork Tail Drongo	LC
79	Dicruridae	*Dicrurus macrocercus*	Black Drongo	LC
80	Dicruridae	*Dicrurus remifer*	Lesser Racket-tailed Drongo	LC
	Piciformes			
81	Ardeidae	*Nycticorax nycticorax*	Black-crowned Night-heron	LC
82	Megalaimidae	*Psilopogon asiaticus*	Blue Throated Barbet	LC
	Psittacifromes			
83	Psittaciormes	*Psittacula krameri*	Rose-ringed parakeet	LC
84	Psittacidae	*Psittacula roseata*	Blossom-headed Parakeet	NT
	Strigiformes			
85	Strigidae	*Otus lettia*	Collared Scops-Owl	LC
86	Strigidae	*Otus spilocephalus*	Mountain Scops-Owl	LC

Source: NBSAP & ZSI; Indian Birds Journal Vol. 6. No.2 (2010) Special Issue: Nagaland

2.3.2.3 Herpetofauna

As per the data compiled, 15 species of reptiles and 10 species of amphibians are reported from the project districts. List of important herpetofauna found in the project districts is given in **Table 2.14.**

Table 2.14: List of Herpetofauna

S. No.	Family	Scientific Name	Common Name
Reptiles			
	Order-Squamata		
1	Agamidae	*Calotis versicolor*	Common garden lizard
2	Agamidae	*Calotis emma*	Forest crested lizard
3	Agamidae	*Draco spilonotus*	Flying Lizard
4	Boidae	*Eryx johnii*	Indian sand boa
5	Colubridae	*Zamenis mucosus*	Common Rat Snake
6	Elapidae	*Ophiophagus hannah*	King Cobra
7	Elapidae	*Bungarus caeruleus*	Common krait
8	Elapidae	*Naja naja*	Indian cobra
9	Elapidae	*Bungarus niger*	Black krait
10	Gekkonidae	*Hemidactylus garnotii*	Gecko
11	Pythonidae	*Python reticulatus*	Reticulated Python
12	Scincidae	*Eutropis carinata*	Skink
13	Varanidae	*Varanus bengalensis*	Monitor Lizard
14	Viperidae	*Trimeresurus* sp.	Pit Viper
	Order-Testudines		
15	Testudinidae	*Testudo graeca*	Tortoise

Amphibians			
	Order-Anura		
16	Bufonidae	*Bufo melanostictus*	Asian Common Toad
17	Dicroglossidae	*Hoplobatrachus tigerinus*	Indian Bullfrog
18	Hylidae	*Hyla annectans*	Tree Frog
19	Megophryidae	*Megophrys glandulosa*	The Glandular Horned Toad
20	Ranidae	*Amolops gerbillus*	Stream frog
21	Ranidae	*Pterorana khare*	Indian Flying Frog
22	Ranidae	*Rana humeralis*	Bhamo Frog
23	Ranidae	*Rana tytleri*	Yellow-striped Leaf Frog
24	Rhacophoridae	*Rhacophorus bipunctatus*	The twin-spotted Flying Frog
25	Rhacophoridae	*Rhacophorus maximus*	Giant Gliding Frog

Source: NBSAP & ZSI; Selvaraj (2013)

2.3.2.4 Butterflies

As per the data compiled, 62 species of butterflies belonging 5 families are reported from the project districts. Of which, 34 species belongs to Nymphalidae family, followed by 11 species belonging to Lycaenidae family. List of butterflies found in the project districts is given in **Table 2.15.**

Table 2.15: Butterflies in Nagaland

S. No.	Family	*Scientific name*	Common name
1	Hesperiidae	*Choaspes benjaminii*	Indian Awlking
2	Hesperiidae	*Gerosis bhagava*	Common Yellow Breasted Flat
3	Hesperiidae	*Hasora chromus*	Common Banded Awl
4	Hesperiidae	*Oriens goloides*	Common Dartlet
5	Hesperiidae	*Spialia galba*	Indian Skipper
6	Hesperiidae	*Tagiades japetus*	Common Snow Flat
7	Lycaenidae	*Abisara fyllla*	Dark Judy
8	Lycaenidae	*Acytolepis puspa*	Common Hedge Blue
9	Lycaenidae	*Castalius rosimon*	Common Pierrot
10	Lycaenidae	*Chilades lajus*	Lime Blue
11	Lycaenidae	*Heliophorus epicles*	Purple Sapphire
12	Lycaenidae	*Jamides bochus*	Dark Cerulean
13	Lycaenidae	*Jamides celeno*	Common Cerulean
14	Lycaenidae	*Leptotes plinius*	Zebra blue
15	Lycaenidae	*Neopithecops zalmora*	Quaker
16	Lycaenidae	*Talicada nyseus*	Red Pierrot
17	Lycaenidae	*Taraka hamada*	Forest Pierrot
18	Nymphalidae	*Aglais cashmiriensis*	Indian Tortoise Shell
19	Nymphalidae	*Apatura ambica*	Indian Purple Emperor
20	Nymphalidae	*Argyreus hyperbius*	Indian Fritillary
21	Nymphalidae	*Ariadne merione*	Common Castor
22	Nymphalidae	*Athyma perius*	Common Sergeant
23	Nymphalidae	*Cethosia cyane*	Leopard Lacewing
24	Nymphalidae	*Charaxes bernardus*	Tawny Rajah
25	Nymphalidae	*Childrena childreni*	Large Silverstripe
26	Nymphalidae	*Cirrochroa tyche*	Common Yeoman
27	Nymphalidae	*Cyrestis thyodamas*	Common Map
28	Nymphalidae	*Danaus chrysippus*	Plain Tiger
29	Nymphalidae	*Elymnias hypermnestra*	Common Palmfly
30	Nymphalidae	*Elymnias patna*	Blue-Striped Palmfly

S. No.	Family	*Scientific name*	Common name
31	Nymphalidae	*Euploea core*	Common Crow
32	Nymphalidae	*Euripus nyctelius*	Courtesan
33	Nymphalidae	*Fabriciana kamala*	Common Silverstripe
34	Nymphalidae	*Junonia lemonias*	Lemon Pansy
35	Nymphalidae	*Kallima inachus*	Orange Oakleaf
36	Nymphalidae	*Kaniska canace*	Blue Admiral
37	Nymphalidae	*Lethe bhairava*	Rusty Forester
38	Nymphalidae	*Lethe insane*	Common Forester
39	Nymphalidae	*Moduza procris*	Commander
40	Nymphalidae	*Mycalesis perseus*	Common Bushbrown
41	Nymphalidae	*Parantica aglea*	Glassy Tiger
42	Nymphalidae	*Phalanta phalantha*	Common Leopard
43	Nymphalidae	*Polyura athamas*	Common Nawab
44	Nymphalidae	*Sumalia daraxa*	Green Commodore
45	Nymphalidae	*Symbrenthia hippoclus*	Common Jester
46	Nymphalidae	*Symbrenthia hypselis*	Himalayan Jester
47	Nymphalidae	*Vagrans egista*	Vagrant
48	Nymphalidae	*Vanessa cardui*	Painted Lady
49	Nymphalidae	*Vanessa indica*	Indian Red Admiral
50	Nymphalidae	*Ypthima asterope*	Common Threering
51	Nymphalidae	*Ypthima baldus*	Common Fivering
52	Papilionidae	*Graphium cloanthus*	Glassy Bluebottle
53	Papilionidae	*Papilio alcmenor*	Red Breast
54	Papilionidae	*Papilio polyctor*	Common Peacock
55	Pieridae	*Catopsilia pomona*	Common Emigrant
56	Pieridae	*Colias fieldii*	Dark Clouded Yellow
57	Pieridae	*Delias pasithoe*	Red-Base Jezebel
58	Pieridae	*Eurema hecabe*	Common Grass Yellow
59	Pieridae	*Ixias pyrene*	Yellow Orange Tip
60	Pieridae	*Pareronia valeria*	Common Wanderer
61	Pieridae	*Pieris brassicae*	Large Cabbage White
62	Pieridae	*Pieris canidia*	Indian Cabbage White

Source: NBSAP & ZSI; Naro & Sondhi (2014), Bhupathy et al. (2011)

2.3.3 Protected Areas

The protected area network in Nagaland occupies 222.36 sq. km area, which constitute about 1.34% of the state's geographical area. The Protected Area Network includes 1 National Park (NP) and 3 Wildlife Sanctuaries (WLS). None of the protected area falls in project districts. Details of the protected areas are presented below in **Table 2.16**. Map showing location of all the protected areas in Nagaland is given at **Figure 2.6**.

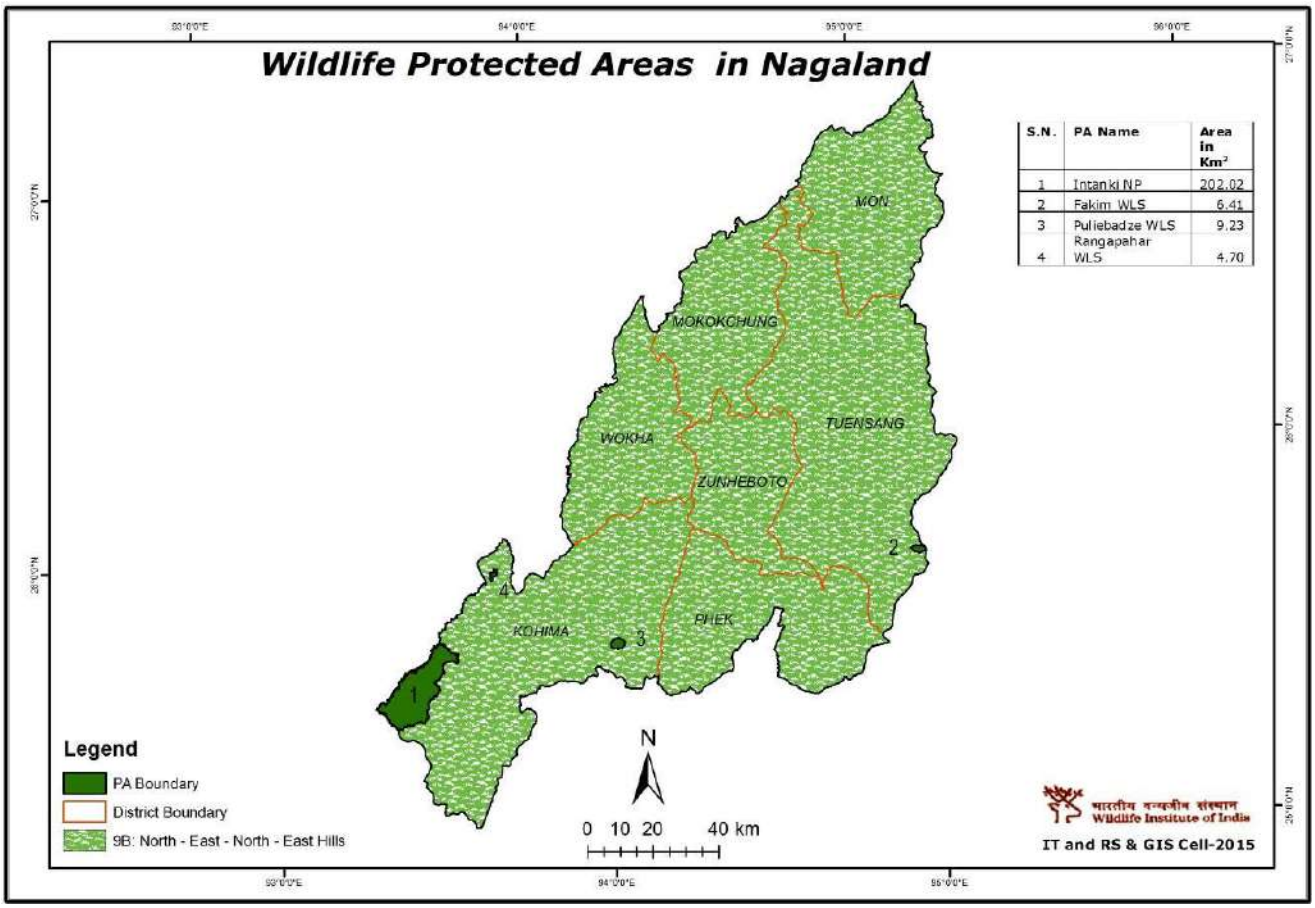

Figure 2.6: Protected Area Map of Nagaland

Table 2.16: Protected Area Network in Nagaland

S. No.	Protected Areas	Area (sq km)	District	Year of Notification
1	Intaki National Park	202.02	Peren	1993
2	Fakim Wildlife Sanctuary	6.41	Kiphire	1980
3	Puliebadze Wildlife Sanctuary	9.23	Kohima	1980
4	Rangapahar Wildlife Sanctuary	4.70	Dimapur	1986

2.3.4 Community Reserves

Community Reserves are the biodiversity abundant lands that are privately or community-owned, and are managed by the individual(s)/communities in possession of the area. These reserves allow for extraction of natural resources, the levels of which are governed by a multi-stakeholder Reserve Management Committee. Community Reserve Management Committee is to consist of five representatives nominated by the local Village Panchayat or the Gram Sabha, and one representative each from the State Department of Forest and Wildlife.

As per information available from State forest department and ENVIS Centre on Wildlife & Protected Areas, the State Government of Nagaland had Notified 57 Community Reserves (**Table 2.17**) under section 36C(1) of the

Wildlife Protection Act, 1972. In the instant scheme, all such areas are completely avoided through careful route selection.

Table 2.17: List of Community Reserves Notified Under section 36C(1) Wildlife Protection Act 1972, in Nagaland

S.No.	Name of Community Reserve	Year of Establishment	Area (km^2)
1	Atoizu Community Reserve	2015	4.0
2	Benreu Community Reserve	2018	30.0
3	Bhumbak Community Reserve	2018	6.5
4	Bonchu Community Reserve	2009	9.05
5	Chemekong Community Reserve	2015	29.175
6	Chishilimi Community Reserve	2015	3.5
7	D. Khel, Kohima Village Community Reserve	2015	3.0
8	Dihoma Community Reserve	2015	2.0
9	Gariphema Community Reserve	2018	2.65
10	Hukphang Community Reserve	2018	3.0
11	Jotsoma Community Reserve	2018	5.0
12	Kanjang Community Reserve	2018	1.0
13	Kezoma Community Reserve	2018	2.65
14	Khekiye Community Reserve	2015	2.5
15	Khonoma Community Reserve	2018	2.65
16	Khrieyalienuomaiko Community Reserve	2018	2.65
17	Khrokhropfu – Lephori Community Reserve	2009	6.15
18	Khudei Community Reserve	2018	4.8
19	Khutur Community Reserve	2018	4.89
20	Khwuma Khel Jotsoma Community Reserve	2018	3.0
21	Kidema Community Reserve	2018	2.65
22	Kigwema Community Reserve	2015	2.65
23	Kikruma Community Reserve	2015	1.1
24	Kilo Old Community Reserve	2018	2.0
25	Kiyelho Community Reserve	2018	3.0
26	Litem Community Reserve	2018	1.6
27	Lizuto Community Reserve	2015	2.5
28	Longra Community Reserve	2018	2.275
29	Longtang Community Reserve	2018	5.8
30	Lotovi Community Reserve	2018	1.0
31	Luzaphuhu Community Reserve	2015	14.0
32	Mezoma Community Reserve	2015	2.85
33	Morakjo Community Reserve	2015	6.5
34	Mpai Namci Community Reserve	2018	20.0
35	Nerhema Perazatsa Community Reserve	2018	20.0
36	Nerhema Yaoke Community Reserve	2018	20.0
37	Nian Community Reserve	2018	2.0
38	Noksen Community Reserve	2018	1.0
39	Piphema “A” Community Reserve	2018	1.0

S.No.	Name of Community Reserve	Year of Establishment	Area (km^2)
40	Piphema "B" Community Reserve	2018	2.8
41	Rangkang Community Reserve	2018	5.15
42	Sakhabama Community Reserve	2018	2.5
43	Sangdak Community Reserve	2018	5.09
44	Scaly-Mopungchuket Community Reserve	2009	15.0
45	Sitap Community Reserve	2018	1.5
46	Tamlu Community Reserve	2018	2.0
47	Thsuruhu Community Reserve	2015	2.7
48	Tsekhewelu Community Reserve	2015	8.0
49	Tsiepama Community Reserve	2015	3.325
50	Tuophema Village Community Reserve	2018	2.5.
51	Viswema Community Reserve	2018	2.65
52	Wakchin Chingla Community Reserve	2018	30.0
53	Yali Community Reserve	2018	14.0
54	Yangpi Community Reserve	2018	3.0007
55	Yaongyimchen Community Reserve	2018	8.0
56	Yongshei Community Reserve	2018	1.5
57	Yonyu Community Reserve	2018	4.8

Source: https://forest.nagaland.gov.in/introduction/ (accessed on 29April 2020)
http://www.wiienvis.nic.in/Database/Community%20Reserves_8228.aspx (accessed on 29April 2020)

2.3.5 Sacred Groves and Community Conserved Areas (CCA)

India is well known for nature's worship, which plays an integral role in the live of many communities. Every aspect of religious and cultural practices is deeply rooted with the forest that helps in nature conservation. These types of forest bring the concept of "sacred groves". Generally, sacred groves are a tract of virgin forest, harbouring rich biodiversity and protected traditionally by the local communities as a whole. The area of scared groves ranges from few square meters to several hectares.

In Nagaland, various ethnic groups have preserved and protected several forest patches and even individual trees or animals with the belief in nature's worship. As per available data, there are 16 sacred groves and community conserved areas (CCA) in the project districts (refer **Table 2.18**). In the instant scheme, all such areas are completely avoided through careful route selection. None of the sacred grove or CCA is at a distance of less than or equal to 5 km from any of the subproject component. The nearest sacred grove from any of the subproject component is Moyit ke-chih at Sotokur village, which is at a distance of approx. 9 km from existing 132/33 kV sub-station at Tuensang. The nearest CCA from any of the subproject component is Helipong CCA at Helipong village, which is at a distance of approx. 6.8 km from existing 132/33 kV sub-station at Tuensang.

Table 2.18: List of Sacred Groves & Community Conserved Areas in Project Districts

S. No.	Name of Sacred Groves/ Community Conserved Areas	Location
District: **Longleng**		
1	Shali Yungnyu CCA in Yongam	94°50'3.17" E 26°32'57.49" N
2	Onem CCA in Yachem	94°44'17.10" E 26°31'15.31" N
3	Khuha Yungnyu CCA in Yongyah	94°47'13.39" E 26°36'4.47" N
District: **Tuensang**		
4	Khinuhanlu, Kuthur village	94°49'20.3" E 26°00'50" N
5	Pelungkechup, Kuthur village	94°48'24.7" E 26°00'00.1" N
6	Khaiknohanlu, Kuthur village	94°50'20.7" E 26°00'40.4" N
7	Wonoshiyeh**,** Kuthur village	94°49'37.88" E 26°00'3.53" N
8	Meiksuk-ke, Chessor village	94°45'31.2" E 26°00'40.2" N
9	Longkhunpit, Chessor village	94°43'5.78" E 26°04'49.96" N
10	Asheru Long Khean, Chessor village	94°43'27" E 26°04'53.7" N
11	Mihshe jin, Chessor village	94°43'12.08" E 26°08'7.18" N
12	Wohnu-ya ('Abode of birds'), Sotokur village	94°47'05.7" E 26°08'05.2" N
13	Moyit ke-chih, Sotokur village	94°45'01.66" E 26°10'45.25" N
14	Shih Yeanyung, Sotokur village	94°45'29.99" E 26°09'42.65" N
15	Helipong CCA	94°44'51.32"E 26°12'47.38" N
16	Pangsha CCA	95° 4'34.57"E 26°16'30.80" N

Source: https://shodhganga.inflibnet.ac.in/bitstream/10603/219638/13/13_chapter%204.pdf https://shodhganga.inflibnet.ac.in/bitstream/10603/125730/7/07%20chapter%203.pdf https://www.iccaconsortium.org/wp-content/uploads/2018/02/Documentation-of-Community-Conserved-Areas-of-Nagaland-final.pdf

2.3.6 Important Bird Areas (IBA)

Bird Life International (www.birdlife.org) has identified 9 Important Bird Areas (IBA) in Nagaland. These IBAs cover 606.25 sq. km area, which constitute about 3.66% of the state's geographical area. None of the IBAs falls in project districts. Details of the IBAs are presented below in **Table 2.19**.

Table 2.19: Important Bird Areas in Nagaland

S. No.	IBA Code	IBA Name	Criteria	Important Species	Area (sq km)	District
1	IN421	Fakim Wildlife Sanctuary and Saramati area	A1, A2	*Tragopan blythii, Syrmaticus humiae, Aceros nipalensis*	30.00	Kiphire
2	IN422	Intaki National Park	A1, A3	*Cairina scutulata, Aceros nipalensis*	202.02	Peren
3	IN423	Khonoma Nature Conservation and Tragopan Sanctuary	A1, A2	*Tragopan blythii, Apus acuticauda*	25.00	Kohima
4	IN424	Mount Paona	A1, A2	*Tragopan blythii, Aceros nipalensis*	30.00	Peren
5	IN425	Mount Zanibu	A1, A2	*Tragopan blythii, Syrmaticus humiae, Columba punicea, Aceros nipalensis*	40.00	Phek
6	IN426	Mount Ziphu	A1, A2	*Tragopan blythii, Syrmaticus humiae, Gallinago nemoricola,*	50.00	Phek

S. No.	IBA Code	IBA Name	Criteria	Important Species	Area (sq km)	District
				Aceros nipalensis		
7	IN427	Pfutsero-Chizami	A1, A2	*Tragopan blythii, Syrmaticus humiae*	70.00	Phek
8	IN428	Puliebadze-Dzukou-Zapfu	A1, A2	*Tragopan blythii, Apus acuticauda*	109.23	Kohima
9	IN429	Satoi Range	A1, A2	*Tragopan blythii, Syrmaticus humiae, Aceros nipalensis*	50.00	Kiphire

Source: http://www.birdlife.org/datazone/country/india. Checked on 2020-04-24
http://wiienvis.nic.in/Database/IBA_8463.aspx Checked on 2020-04-24

International Bird Areas are achieved through the application of quantitative ornithological criteria, grounded in up-to-date knowledge of the sizes and trends of bird populations. The Global criteria are as follows:

A1. Globally threatened species

Criterion: The site is known or thought regularly to hold significant numbers of a globally threatened species, or other species of global conservation concern.

A2. Restricted-range species

Criterion: The site is known or thought to hold a significant component of a group of species whose breeding distributions define an Endemic Bird Area (EBA) or Secondary Area (SA).

A3. Biome-restricted species

Criterion: The site is known or thought to hold a significant component of the group of species whose distributions are largely or wholly confined to one biome.

2.3.7 Wetland

As per the National Wetland Atlas of India, the estimated wetland area of the state is 21544 ha area, which is 1.3% of total geographic area of the state. It includes 267 small wetlands (<2.25 ha) also. Total number of wetlands present in the State is 421, however, none of the wetlands is in the Ramsar list. Doyang Lake, Chathe Reservoir, Shilloi Lake and parts of Tizu river are important wetlands of the State. River/Stream is the single most dominant wetland type of the state with 89.37% contribution. Among, other wetland types, reservoir/barrage is the major one. Two reservoirs are mapped with 1547 ha area (7.18%). Only one natural lake/pond is mapped with 3 ha area. Wetland map of the state is shown in **Figure 2.7**.

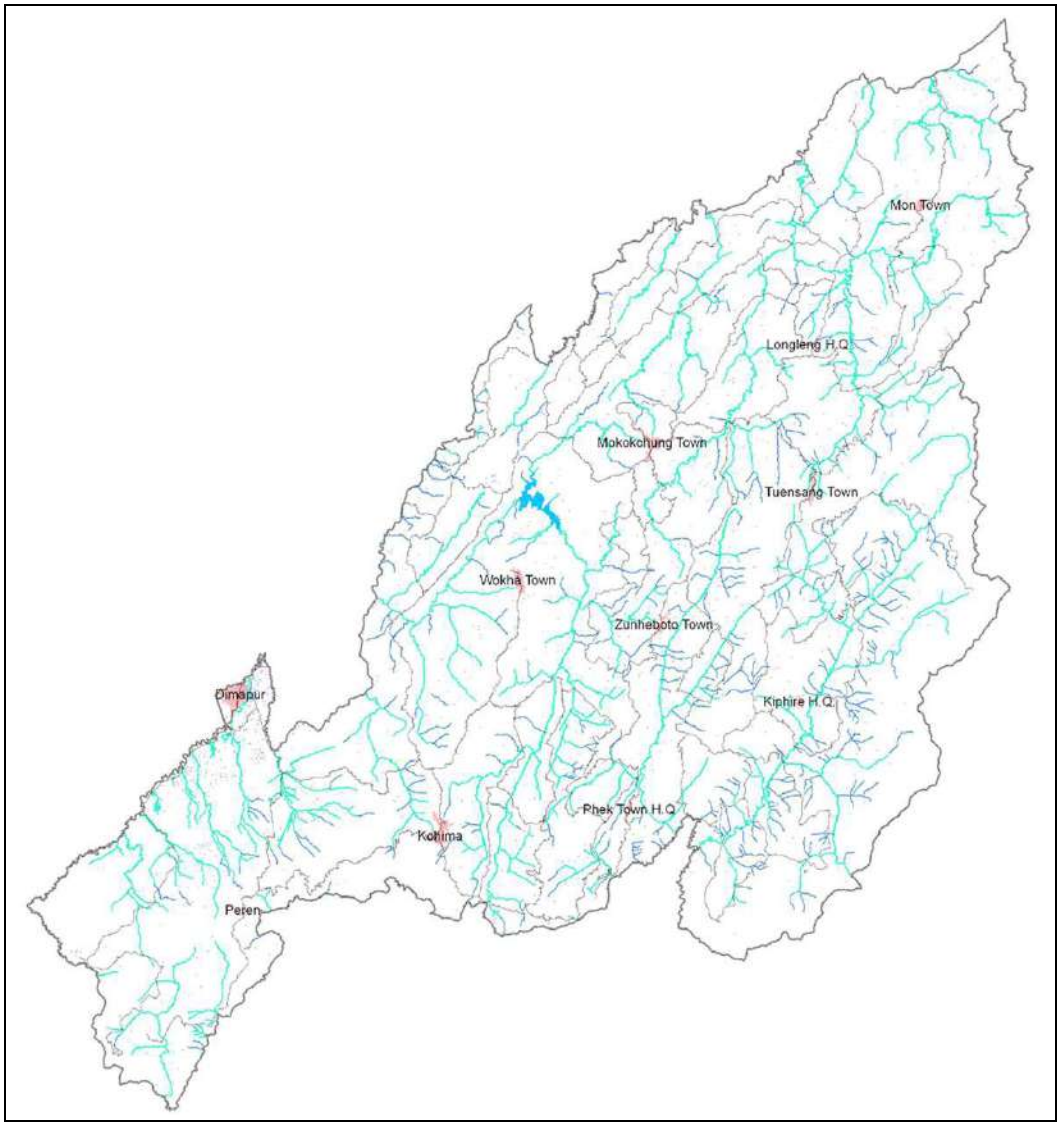

Figure 2.7: Wetland Area Map of Nagaland

In the project districts, the estimated 15371 ha, which is 1.4% of total geographic area of the project districts. It includes 232 small wetlands also. District wise area of wetlands (type-wise) in project district is given in **Table 2.20.**

Table 2.20: District Wise Area of Wetlands (Type-Wise) in Project Districts

Name of District		Longleng	Tuensang	TOTAL
Geographical Area (ha)		**56200**	**253600**	**309800**
Wetland Type Area (ha)	Lake/ pond	-	-	**0**
	Ox-bow lake/ Cut-off meander	-	-	**0**
	Waterlogged (Natural)	-	-	**0**
	River/ Stream	971	2013	**2984**
	Reservoir/ Barrage	-	-	**0**
	Tank/ Pond	-	-	**0**
Sub Total (ha)		**971**	**2013**	**2984**
Wetlands (<2.25 ha)		3	2	**5**
Total (ha)		**974**	**2015**	**2989**

2.4 SOCIO-ECONOMIC ENVIRONMENT

For sustainable development, it is important to understand social and economic conditions of the community in the region, impacts of development on the community, measures to mitigate negative impacts and enhance the positive impacts. For new development initiatives, socio economic assessment plays an important role to ensure community participation and their acceptance of the development activity. It also helps in planning the activities for local area development.

Nagaland has a high literacy rate of 80.1 per cent. Majority of the population in the state speaks English, which is the official language of the state. The state offers technical and medical education. Nevertheless, agriculture and forestry contribute majority of Nagaland's Gross Domestic Product. Most of state's population, about 68 per cent of the total, depends on rural cultivation. The main crops of the state are rice, millet, maize, and pulses. Cash crops, like sugarcane and potato, are also grown in some parts. Plantation crops such as premium coffee, cardamom, and tea are grown in hilly areas in small quantities, but a large growth potential. Most people cultivate rice as it is the main staple diet of the people. About 80% of the cropped area is dedicated to rice. Oil seeds is another, higher income crop gaining ground in Nagaland. The farm productivity for all crops is low, compared to other Indian states, suggesting significant opportunity for farmer income increase. Currently the Jhum to Terraced cultivation ratio is 4:3; where Jhum is local name for cut-and-burn shift farming. Jhum farming is ancient, causes a lot of pollution and soil damage, yet accounts for majority of farmed area. The state does not produce enough food and depends on trade of food from others states of India. Forestry is also an important source of income. Cottage industries such as weaving, woodwork, and pottery are also an important source of revenue. Tourism has a lot of potential, but largely limited due to insurgency and concern of violence over the last five decades. Nagaland's gross state domestic product for 2004 is estimated at $1.4 billion in current prices.

Longleng District, the home of the Phom Nagas is the tenth district of Nagaland formed by transferring 3 circles namely Tamlu, Yongya and Longleng out of Tuensang District through Government of Nagaland, Home Department Notification No. GAB-3/5/93 (pt-II) dated 24th October 2003. The district has a population of 50,484 with a population density of 90 people/sq km. Longleng has a sex ratio of 905 females for every 1000 males **(Table 2.21)** and a literacy rate of 72.2% **(Table 2.22)**. Total working population of the district is 60.55%, of which 68.52% are main workers and 31.48% are marginal workers (**Table**

2.23). Of the total main working population, 80.39% are cultivators, 1.33 % are agricultural labour, 0.95% are household worker and the rest 17.33% are 'other workers' (**Table 2.24**). Agriculture is the main profession of the population of the district. Jhum cultivation is the main form of Agriculture, though; wet paddy cultivation is also practiced. There are no established industries in the district, though, there are possibilities of Handicraft and Handloom industries.

Tuensang District: The name of the district Tuensang originated from the name of the District headquarter, namely, Tuensang, now an urban area and the administrative center of the District. The Tuensang district is home to five Naga tribes i.e. Chang, Sangtam, Khiamniugam, Yimchungar, Phom and Sumi. According to 2011 census, the total population of the district is 196,596, with a population density of 78 persons/sq km. The sex ratio of the district is 929 females for 1000 males (**Table 2.21**). The district has a literacy rate of 73.1%, which is lower than the corresponding National figure (**Table 2.22**). Total working population of the district is 49.93%, of which 74.90% are main workers and 25.10% are marginal workers (**Table 2.23**). Of the total main working population, 78.18% are cultivators, 1.29% are agricultural labour, 0.74% are household worker and the rest 19.80% are other workers (**Table 2.24**). Two forms of Agriculture i.e. Jhum and Terrace are practiced. Rice, Maize, Millet, Pumpkin, Beans, Squash, Potato are the main Agriculture products. Industries are by and large absent in the district, despite the fact, that occurrence of various minerals such as Asbestos, Coal, Limestone, Marble, Magnesite, Chromite etc. have been detected in the district.

Table 2.21: Demographic Profile of Project Districts

Districts	No. of Household	Population			Sex Ratio	Scheduled Caste			Scheduled Tribe			
		Total	Male	Female		Total	Male	Female	Total	Male	Female	%
1	2	3	4	5	6 = (5/4*1000)	7	8	9	10	11	12	13 = (10/3*100)
Longleng	11985	50484	26502	23982	905	0	0	0	48615	25268	23347	96.30
Tuensang	36742	196596	101933	94663	929	0	0	0	190916	98212	92704	97.11

Source: Census of India, 2011

Table 2.22: Literacy Profile of Project Districts

Districts	Total population			Population (above 6 years)			Literate (Number)			Literate Rate (%)		
	Total	Male	Female	Total	Male	Female	Total	Male	Female	Total	Male	Female
1	2	3	4	5	6	7	8	9	10	11 = (8/5*100)	12 = (9/6*100)	13 = (10/7*100)
Longleng	50484	26502	23982	41374	21670	19704	29859	16139	13720	72.2	74.5	69.6
Tuensang	196596	101933	94663	160806	83417	77389	117511	63653	53858	73.1	76.3	69.6

Source: Census of India, 2011

Table 2.23: Occupational Pattern of Project Districts

District	Total Population	Working Population												Non Worker			
		Total Worker				Main Worker				Marginal Worker							
		Total	Male	Female	%*	Total	Male	Female	%**	Total	Male	Female	%***	Total	Male	Female	%****
Longleng	50484	30568	16273	14295	60.55	20944	11547	9397	68.52	9624	4726	4898	31.48	19916	10229	9687	39.45
Tuensang	196596	98154	52931	45223	49.93	73518	41420	32098	74.90	24636	11511	13125	25.10	98442	49002	49440	50.07

Source: Census of India, 2011

*Note: *Total Worker% = Total Worker/ Total Population x 100, **Main Worker% = Main Worker/ Total Worker x 100, *** Marginal Worker% = Marginal Worker/ Total Worker x 100, **** Non Worker% = Non Worker/ Total Population x 100*

Table 2.24: Main Worker Profile of Project Districts

Districts	Main Worker	Cultivators				Agricultural Labour				Household Industry Worker				Other Worker			
		Total	Male	Female	%*	Total	Male	Female	%**	Total	Male	Female	%***	Total	Male	Female	%****
Longleng	20944	16837	8415	8422	80.39	278	164	114	1.33	199	118	81	0.95	3630	2850	780	17.33
Tuensang	73518	57479	28758	28721	78.18	945	557	388	1.29	541	313	228	0.74	14553	11792	2761	19.80

Source: Census of India, 2011

*Note: *Total Cultivator% = Total Cultivator/ Main Worker x 100, **Total Agricultural Labour% = Total Agricultural Labour/ Main Worker x 100, ***Household Industry Worker% = Total Household Industry Worker/ Main Worker x 100, **** Total Other Worker% = Total Other Worker/ Main Worker x 100*

Chapter 3 POLICY, LEGAL AND REGULATORY FRAMEWORK

3.1 INTRODUCTION

Power transmission and distribution project activities by their inherent nature and flexibility have negligible impacts on environmental and social attributes. Indian laws relating to environmental and social issues have strengthened in the last decade both due to local needs and international commitments. DPN, IA and contractors are undertaking its activities within the purview of Indian and State specific laws keeping in mind appropriate international obligations and directives and guidelines with respect to environmental and social considerations of World Bank's Operational Policies.

3.2 CONSTITUTIONAL PROVISIONS

Subsequent to the first United Nations Conference on Human Environment at Stockholm in June, 1972, which emphasized the need to preserve and protect the natural environment, the Constitution of India was amended through the historical 42nd Amendment Act, 1976 by inserting Article 48-A and 51-A (g) for protection and promotion of the environment under the Directive Principles of State Policy and the Fundamental Duties respectively. The amendment, *inter alia* provides:

"The State shall endeavor to protect and improve the environment and to safeguard the forests and wildlife of the country". (New Article 48A)

"It shall be the duty of every citizen of India to protect and improve the natural environment including forests, lakes, rivers and wildlife and to have compassion for living creatures". [New Article 51 A(g)]

Article 21 of the constitution provides, "no person shall be deprived of his life or personal liberty except according to procedure established by law".

Article 21 is the heart of the fundamental rights and has received expanded meaning from time to time after the decision of the Supreme Court in 1978. The Article 21 guarantees fundamental right to life – a life of dignity to be lived in a proper environment, free of danger or disease or infection. Recently, Supreme Court has broadly and liberally interpreted the Article 21, transgressing into the area of protection of environment, and held that the citizen's right to live in an eco-friendly atmosphere is to be interpreted as the basic right guaranteed under Article 21.

Thus, the Indian Constitution now has a two folds provision:

(a) On the one hand, it gives directive to the State for the protection and improvement of environment.

(b) On the other hand, the citizens owe a constitutional duty to protect and improve the natural environment.

Article 371 A Provides special provision with respect to state of Nagaland which states "no act of parliament in respect of religious and social practices of the Naga, Naga customary laws and procedures, administration of civil and criminal justices involving decisions according to Naga customary law and ownership and transfer of land and its resources shall apply to the state of Nagaland, unless Legislative Assembly of the state, by a resolution, so decides".

Constitutional provisions in regard to social safeguards are well enshrined in the preamble such as **JUSTICE**, social, economic and political; **LIBERTY** of thought, expression, belief, faith and worship; **EQUALITY** of status and of opportunity; **FRATERNITY** assuring the dignity of the individual and the unity and integrity of the Nation. Fundamental Rights and Directive Principles guarantee the right to life and liberty. Health, safety and livelihood have been interpreted as part of this larger right. Social safeguards provisions are dealt in detail in different Article such as Article-14, 15 17, 23, 24, 25, 46, 330, 332 etc.

3.3 ENVIRONMENTAL PROVISIONS

Environmental issues of T&D projects are manageable given the inherently small 'foot print' of towers and flexibility in siting facilities within a relatively large host area and are mostly localized to RoW. However, transmission line project may have some adverse effects on natural resources. These impacts can be minimized by careful route selection and siting of substations. The applicable acts, rules, and relevant policies in the context of the project and its status of compliance are presented in **Table 3.1**.

3.4 SOCIAL PROVISIONS

The applicable acts, rules, and relevant policies in the context of the project and its status of compliance are presented in **Table 3.2**.

Table 3.1: Environmental Provisions

S. No.	Acts, Notifications and Policies	Relevance	Applicability to the project	Status of Compliance
1.	Electricity Act, 2003	To consolidate the laws relating to generation, transmission, distribution, trading and use of electricity. Under the provisions of Section 68(1):- Prior approval of the Govt. of Nagaland (GoN) is a mandatory requirement to undertake any new transmission project 66kV upward and for distribution project of 33kV system in the State.	Applicable - Transmission line projects are constructed under the ambit of Electricity Act, 2003 following the provisions of Section 67 & 68 of act.	Complied with: MoP, GoI approved the NERPSIP comprehensive scheme for six North Eastern States including Nagaland under vide its Office Memorandum dated 1st December 2014.
2.	Forest (Conservation) Act, 1980	To protect and conserve Forest Areas and Tree Cover. Any transmission/ distribution line traverses forest land, prior clearance is mandatorily required from Ministry of Environment, Forest & Climate Change (MoEF&CC), GoI under the Forest (Conservation) Act, 1980. Government of Nagaland vide its Notification No. FOR-58/82 dated 03-07-1986 has extended the application of this Act to forest lands under the control of Forest Department. Natural forest under control of private individuals or community is not under the preview of the Act.	Not Applicable - No notified forest area is involved in any of the line routes or substations location.	Not Required
3.	Environment (Protection) Act, 1986	To protect and improve the overall environment. It is umbrella legislation for the protection and improvement of environment.	Applicable – Though some limited compliance measures notified under this EPA, 1986 are to be adhered to relevant rules and regulations under the EPA, 1986 applicable to the operations of DPN.	Complied with: Though applicable as it is umbrella legislation, however, as such statutory permission/ license is not required.

S. No.	Acts, Notifications and Policies	Relevance	Applicability to the project	Status of Compliance
i)	Ozone Depleting Substances (Regulation and Control) Rules, 2000	Regulate and control manufacturing, import, export and use of Ozone Depleting Substances under Montreal Protocol adopted on 16th September 1987	Applicable - As per the notification, certain control and regulation has been imposed on manufacturing, import, export, and use of these compounds.	Complied with: Only CFC free equipments are being procured/ specified in tender document
ii)	Batteries (Management and Handling) Rules, 2001	Provides certain restriction on disposal of used batteries and its handling and to file half yearly return in prescribed form to the concerned State Pollution Control Board.	Applicable during operation phase only – Used batteries to be disposed to dealers, manufacturer, registered recycler, reconditioners or at the designated collection centers only. A half-yearly return to be filed as per Form-8 to the Nagaland State Pollution Control Board	Batteries are used during operation phase. Hence, the issue of proper handling and disposal of batteries as per rules not an issue during construction stage.
iii)	Hazardous Wastes (Management, Handling and Transboundary Movement) Rules, 2008	To ensure that the hazardous wastes are managed in a manner which shall protect the health and the environment against the adverse effects that may result from such waste. The used transformer oil has been declared as a hazardous waste vide this notification.	Applicable – Requires proper handling, storage and disposed only to authorized disposal facility (registered recyclers/ reprocessors). In case it is decided to outsource the process of recycle of used oil to registered recycler as per the provisions of notification then DPN shall submit the desired return in prescribed form to concerned State Pollution Control Board at the time of disposal of used oil.	Generally Used oil is generated after 10-15 years of operation of transformers and hence the issues of handling and disposals of hazardous transformer oil is not an issue at this stage.
iv)	E-waste (Management and Handling) Rules, 2011	To ensure that e-waste is managed in a manner which shall protect health and the environment against the adverse effects that may result from hazardous substance contained in such wastes. It is the responsibility of the bulk consumer to ensure that e-waste generated is	Applicable – To dispose e-waste generated in environmentally sound manner by channelizing to authorized collection centres/ registered dismantler/ recyclers/ return to producers. DPN, being a bulk consumer of electrical and electronics equipment's shall maintain record as per	E-waste disposal is not an issue during construction phase.

S. No.	Acts, Notifications and Policies	Relevance	Applicability to the project	Status of Compliance
		channelized to authorized collection centre(s) or registered dismantler(s) or recycler(s) or is returned to the pick-up of take back services provided by the producer.	Form-2 for scrutiny by State Pollution Control Board.	
4.	The Biological Diversity Act, 2002	To provide for conservation of biological diversity, sustainable use of its components and fair and equitable sharing of the benefits arising out of the use of biological resources, knowledge and for matters connected therewith. All restrictions applicable to protected areas like National Park & Sanctuaries are also applicable to these reserves.	Not Applicable - The present project does not involve any biosphere reserves.	Not Required
5.	The Nagaland Tree Felling Regulation, 2002	It deals with felling of trees from non-forest and registered plantation areas. Felling of trees for construction of transmission lines would be governed under this Act wherever it is applicable.	Applicable	
6.	The Scheduled Tribes & Other Traditional Forest Dwellers (Recognition of Forest Rights) Act, 2006	When transmission projects pass through forest land, NOC from DC has to be obtained before Stage-II approval in compliance to FRA Act as per MoEF&CC circular dated 5th February 2013	Not Applicable - No forest clearance is involved.	Not Required
7.	Ancient Monuments & Archaeological Sites and Remains Act, 1958	To prevent damage to archaeological sites and its maintenance. It also places restriction on activities which can cause harm to the monument /property. The law is however applicable only in monuments identified by the Archaeological Survey of India.	Not Applicable - All such areas have been completely avoided.	Not Required

Table 3.2: Social Provisions

S. No.	Acts, Notifications and Policies	Relevance	Applicability to the project	Status of Compliance
1.	The Right to Fair Compensation and Transparency in Land Acquisition, Rehabilitation and Resettlement Act, 2013	Act ensures appropriate identification of the affected families/ households, fair compensation and rehabilitation of titleholders and non-titleholders. The Act authorizes State Govt. (i.e. GoN) or its authorized Government agency to complete the whole process of acquisition of private land including Social Impact Assessment (SIA), Action Plan for R&R (i.e. Rehabilitation and Resettlement) & its implementation and the DPN responsibility is limited to identification and selection of suitable land based on technical requirement and ensuring budget allocation.	Not Applicable – Till the state legislative Assembly adopts a resolution in this regard, as per the provision of Article 371 A of the Constitution of India.	Not Required
2.	Rights of Way (RoW) and Compensation	The Electricity Act, 2003 has a provision for notifying transmission company under section 164 (B) to avail benefits of eminent domain provided under the Indian Telegraph Act, 1885.	Applicable - DPN may seek for GoN authorization to exercise all the powers that the Telegraph authority possesses and can spot, construct and erect towers without acquiring the land. Moreover, all damages due to its activity shall be compensated at market rate. In case of agricultural or private land the provisions of section-67 and or section-68 (5 & 6) of the Electricity Act, 2003 and section-10 of the Indian Telegraph Act, 1885 are followed for assessment and payment of compensation towards such damages.	Complied with: Implementing Agency has already been vested with powers of telegraph authority by GoI vide Gazette Notification dated Dec.24, 2003. However, compensation for all damages are being paid to the individual land owner as per the provision of Section-10 (d) of Indian Telegraph Act, 1885

S. No.	Acts, Notifications and Policies	Relevance	Applicability to the project	Status of Compliance
3.	The Right to Information Act, 2005	To provide for setting out the practical regime of right to information for citizens to secure access to information under the control of public authorities, in order to promote transparency and accountability in the working of every public authority, the constitution of a Central Information Commission and State Information Commissions and for matters connected therewith or incidental thereto.	Applicable - Designated authorities to be in place.	Complied with: Designated authorities are already in place in DPN.
4.	Indian Treasure Trove Act, 1878 as amended in 1949	To provide for procedures to be followed in case of finding of any treasure, archaeological artifacts etc. during excavation.	Not Applicable - No such instances reported.	Not Required

3.5 WORLD BANK OPERATIONAL POLICY

When World Bank provide governments with financing to invest in projects such as building a road, connecting people to electricity, or treating waste water, World Bank we aim to ensure that the people and the environment are protected from potential adverse impacts. World Bank do this through policies that identify, avoid, and minimize harm to people and the environment. These policies require the borrowing governments to address certain environmental and social risks in order to receive World Bank support for investment projects. The mandatory environment and social requirements with respect to World Bank Operational Policies are presented in **Table 3.3**.

3.6 STATUTORY PERMISSION/LICENSES/NOC OBTAINED

The applicability of acts, notifications and policies have already been described in above paragraphs and table. As per the applicability, necessary permission/ licenses/ NOC so far obtained by IA or contractor are:

- Under the provisions of Section 68(1) of Electricity Act, 2003, prior approval GoN is a mandatory requirement to undertake any new transmission project 66kV upward and for distribution project of 33kV system in the State. As a part of permission/ approval, GoI approved the NERPSIP comprehensive scheme for six North Eastern States including Nagaland under vide its Office Memorandum dated 1st December 2014. In addition, Implementation/ Participation agreement between DoP and PGCIL has been signed on 26th March, 2015.

- All the contractors are operating with valid labor license as per provision under section – 12(1) of the Contract Labour (Regulation & Abolition) Act, 1970 and also certified under Section- 7(3) of the Building and Other Construction Workers (Regulation of Employment and Condition of Service) Act, 1996 from Ministry of Labour & Employment.

- All the contractors have obtained requisite insurance policy as per provisions of Employee Compensation Act, 1923 for its employed workforce.

- For the tower foundation, No Objection Certificates (NoC) from concerned land owner/ Headman /Village Council are being obtained as per the progress of work.

Table 3.3: World Bank Operational Policy

S. No.	Acts, Notifications and Policies	Relevance	Applicability to the project	Status of Compliance
1.	OP- 4.01: Environmental Assessment	To ensure the environmental and social and sustainability of investment projects. Support integration of environmental and social aspects of projects in the decision-making process.	Applicable - E & S aspects of the project have already been integrated into management procedures based on comprehensive environment assessment undertaken by IA.	Complied with: E & S aspects of the project have already been integrated into management procedures based on comprehensive environment assessment undertaken by IA during 2015.
2.	OP- 4.04: Natural Habitats	To promote and supports natural habitat conservation and improved land use to integrate into national and regional development the conservation of natural habitats and the maintenance of ecological functions. Furthermore, to promote the rehabilitation of degraded natural habitats.	Not Applicable - The present project does not involve any natural habitats such as biodiversity area, protected area, sacred groves etc. However, NoC from village councils (Head man, Gram Burrah) and land owners are being obtained in this regard.	Not Required
3.	OP-4.11: Physical Cultural Resources (PCR)	To preserve PCR and in avoiding their destruction or damage. PCR includes resources of archaeological, paleontological, historical, architectural, and religious (including graveyards and burial sites), aesthetic, or other cultural significance.	Not Applicable - The Present project does not encroach upon any such resources.	Not Required
4.	OP-4.36: Forests	To harness the potential of forests to reduce poverty in a sustainable manner, integrate forests effectively into sustainable economic development, and protect the vital local and global environmental services and values of forests	Applicable – Though all line routes and substation locations successfully avoided encroachment into any Protected and Reserve forests. However, line routes pass through community and private forests. To minimise adverse impact on forests, management measure already provided in DPN's ESPPF	Complied with: To minimise adverse impact on forests, management measure already provided in DPN's ESPPF of June, 2015
5.	WB EHS Guidelines for Electric Power Transmission and Distribution	The Environmental, Health, and Safety (EHS) Guidelines are technical reference documents with general and industry specific examples of Good International Industry Practice. The EHS	Applicable - EHS guidelines are being followed during project implementation.	Complied with: EHS guidelines are being followed during project implementation.

S. No.	Acts, Notifications and Policies	Relevance	Applicability to the project	Status of Compliance
		Guidelines contain the performance levels and measures that are generally considered to be achievable in new facilities by existing technology at reasonable costs.		
6.	OP 4.12 – Involuntary Resettlement	Covers direct economic and social impacts both resulting from Bank-assisted investment projects and are caused by the involuntary taking of land. To avoid or minimize involuntary resettlement and, where this is not feasible, assist displaced persons in improving or at least restoring their livelihoods and standards of living in real terms relative to pre-displacement levels or to levels prevailing prior to the beginning of project implementation, whichever is higher.	Not Applicable - As no involuntary acquisition invoked for securing land for proposed substations. However, fresh land required for construction of 132/33 kV substation at Longleng was secured through direct Purchase on Willing Buyer Willing Seller basis on negotiated rate	Not Required.
7.	OP 4.10 – Indigenous Peoples	This policy contributes to the Bank's mission of poverty reduction and sustainable development by ensuring that the development process fully respects the dignity, human rights, economies, and cultures of Indigenous Peoples. The objective is to design and implement projects in a way that fosters full respect for indigenous peoples so that they receive culturally compatible social and economic benefits, and do not suffer adverse effects during the development process. The project shall ascertain broad community support for the project based on social assessment and free prior and informed consultation with the affected Tribal community, if any.	Explicit consent from ADC and the Village Councils is required in the case of acquisition of lands which is not applicable in instant project. However, NoC of from village councils (Head man, Gram Burrah) and land owners obtained for community forest land/ADC area wherever applicable.	Complied with: NoC of from village councils (Head man, Gram Burrah) and land owners being obtained for community forest land/ADC area wherever applicable.

Chapter 4 MAJOR FEATURES OF FINAL ROUTE & ENVIRONMENT IMPACT

4.1 INTRODUCTION

Environmental impact of transmission and distribution (T&D) line projects are not far reaching and are mostly localized to RoW. However, T&D project has some effects on natural and socio-culture resources. These impacts can be minimized by careful route selection. To minimize these possible impacts, DPN & IA at the system planning stage itself try to avoid ecological sensitive areas like forest. Wherever such infringements are substantial, different alternative options are considered to select most viable route alignment. For further optimization of route modern survey techniques/tools like GIS, GPS aerial photography is also applied. Introduction of GIS and GPS in route selection result in access to updated/latest information, through satellite images and further optimization of route having minimal environmental impact. Moreover, availability of various details, constraints like topographical and geotechnical details, forest and environmental details etc. help in planning the effective mitigate measures including engineering variations depending upon the site situation/location. The route/site selection criteria followed is detailed below in the ensuing paragraphs.

4.2 ENVIRONMENTAL CRITERIA FOR ROUTE SELECTION

For selection of optimum route, the following points are taken into consideration:

i. The route of the proposed lines does not involve any human rehabilitation.
ii. Any monument of cultural or historical importance is not affected by the route of the line.
iii. The proposed route does not create any threat to the survival of any community with special reference to Tribal Community.
iv. The proposed route does not affect any public utility services like playgrounds, schools, other establishments etc.
v. The line route does not pass through any sanctuaries, National Park etc.
vi. The line route does not infringe with area of natural resources.

In order to achieve this, DPN undertook route selection for individual transmission & distribution lines in close consultation with representatives of concerned Forest Department and the Department of Revenue. Although under National law, DPN has the right of eminent domain, yet alternative alignments are considered keeping in mind the above-mentioned factors

during site selection, with minor alterations often added to avoid environmentally sensitive areas and settlements at execution stage.

- As a rule, alignments are generally cited away from major towns, whenever possible, to account for future urban expansion (refer **Figure 4.1** and **Figure 4.2** and **Map 1** for final route of all T&D network).
- Similarly, forests are avoided to the extent possible, and when it is not possible, a route is selected in consultation with the local Divisional Forest Officer, that causes minimum damage to existing forest resources.
- Alignments are selected to avoid wetlands and unstable areas for both financial and environmental reasons.

In addition, care is also taken to avoid National parks, Sanctuaries, Eco-sensitive zones, Tiger reserves, Biosphere reserves, Elephant corridors and IBA sites etc. Keeping above in mind the routes of proposed lines under the project have been so aligned that it takes care of above factors. As such, different alternatives for transmission lines were studied with the help of Govt. published data like Forest atlas, Survey of India etc. and Google Maps to arrive at the most optimum route, which can be taken up for detailed survey and assessment of environmental & social impacts for their proper management.

Similarly, the TOR for detailed survey using modern tool like GIS/GPS also contained parameters to avoid/reduce environmental impact while deciding the final route alignment. The major objectives for detailed survey that are part of contract are summarized below:

(i) The alignment of transmission line shall be most economical from the point of view of construction and maintenance.

(ii) Routing of transmission line through protected and reserved forest area should be avoided. In case it is not possible to avoid the forest or areas having large trees completely then keeping in view of the overall economy, the route should be aligned in such a way that cutting of trees is minimum.

(iii) The route should have minimum crossing of major rivers, railway lines, and national/state highways, overhead EHP power lines and communication lines.

(iv) The number of angle point shall be kept to a minimum.

(v) The distance between the terminal points specified shall be kept shortest possible, consistent with the terrain that is encountered.

(vi) Marshy and low line areas, river beds and earth slip zones shall be avoided to minimum risk to the foundations.

(vii) It would be preferable to utilize level ground for the alignment.

(viii) Crossing of power line shall be minimal. Alignment will be kept at a minimum distance of 300 meters from power lines to avoid induction problems on the lower voltage lines.

(ix) Crossings of communication lines shall be minimized and it shall be preferably at right angle, proximity and paralyses with telecom lines shall be eliminated to avoid danger of induction to them.

(x) Area subjected to flooding searches streams shall be avoided.

(xi) Restricted areas such as civil and military airfield shall be avoided. Care shall also be taken to avoid the aircraft landing approaches.

(xii) All alignment should be easily accessible both in dry and rainy seasons to enable maintenance throughout the year.

(xiii) Certain areas such as query sites, tea, tobacco and saffron fields and rich plantation, gardens and nurseries that will present the owner problems in of right of way and leave clearance during construction and maintenance should be avoided.

(xiv) Angle point should be selected such that shifting of the point within 100 m radius is possible at the time of construction of the line.

(xv) The line routing should avoid large habitation densely populated areas to the extent possible.

(xvi) The area requires special foundations and those prone to flooding should be avoided.

(xvii) For examination of the alternatives and identification of the most appropriate route, besides making use of information/data/details available/extracted through survey of India topographical maps and computer aided processing of NRSA satellite imagery, the contractor shall also carry out reconnaissance/preliminary survey as may be required for the verification and collection of additional information/data/details.

(xviii) The contractor shall submit his preliminary observation and suggestion along with various information/data/details collected and also processed satellite imagery data, topographical map data marked with alternative routes etc. The final evaluation of the alternative routes

shall be conducted by the contractor in consultation with owners' representatives and optimal route alignment shall be proposed by the contractor. Digital terrain modeling using contour data from topographical maps as well as processed satellite data shall be done by the contractor for the selected route. A flythrough perspective using suitable software(s) shall be developed or further refinement of the selected route. If required site visit and field verification shall be conducted by the contractor jointly with the owners' representatives for the proposed route alignment.

(xix) Final digitized route alignment drawing with the latest topographical and other details/features including all river railway lines, canals, roads etc. up to 8 Kms on both side of selected route alignment shall be submitted by the contractors for owners approval along with report containing other information / details as mentioned above.

In the instant project also, criteria for route selection as mentioned above, has been duly adhered to and the proposed 132 kV S/C (On D/C Tower) Tuensang - Longleng Transmission Line route has been analysed of three (03) alternatives routes as described in the IEAR. Subsequently, the proposed route was considered for detail survey by Contractor Agency (after awarding of contract). During detailed survey minor alterations as well as geometrical corrections of the route have been carried out which seems inevitable due to actual ground conditions with prime objective of avoiding dense forest/private plantation areas, settlements, Common Property Resource (CPR), and also considering the technical feasibility of the route from operation and maintenance point of view in consultation with the local village councils prevalent in the project area. Therefore, following minor change in scope of work has been observed with respect to IEAR scope which resulted due to the best effort of IA/DPN in effectively integrating safeguard and engineering measures in successful minimization of impact on forest and environment.

The proposed distribution line connects 2 substations in close vicinity and is having line length of less than 10 km, thus, having negligible environment and social impacts including no involvement of any forest area. Hence, no alternative has been studied for the distribution lines proposed under instant scheme.

For changes in scope of work with respect to IEAR scope i.e. changes in the route alignment based upon alternatives studies and detailed survey for transmission and distribution line is given is **Table 4.1**.

For sub-station, site selection analysis of 2-3 alternatives sites is usually carried out based on environment and social aspects and technical requirement. Such analysis considers various site specific parameters that include availability of infrastructure facilities such as access roads, water, distance from railheads, type of land (Government/ revenue/private land); social impacts such as number of families getting affected; CPR including feasibility of acquisition. The finalization of substation land is done based on above analysis and site visit/verification. The social aspects are provided due weightage after technical requirement in decision making for selection/finalization of land for substation.

It may be noted that in the instant case land for all the proposed substations are either in possession of DPN or identified for purchase on willing seller – willing buyer basis and therefore, the said exercise is not so relevant for proposed project as the consent of owner is major criteria in addition to technical feasibility. However, as per the provisions of ESPPF, all land donations and direct purchases will be subject to a review/ approval by a broad based committee comprising representatives of different sections including those from the IA and GoN.

The finalized location of transmission and distribution substations is given below in **Table 4.2**.

Table 4.1: Change in Scope of Work w.r.t. IEAR

S. No.	Scope as per IEAR		Current Status with justification	Remarks
	Line	Substation		
A	**Transmission Component**			
1	132 kV S/C (on D/C Tower) Tuensang – Longleng Line – **28.74 km**	Establishment of 132/33 kV Sub-station at Longleng (New) Bay extension of 132/33 kV Sub-station at Tuensang	Final route is 29.14 km and line length is slightly increased by 0.4 km as the location of substation is slightly changed for better accessibility. Also, so that environment & social sensitive areas are avoided/ minimized. The route was further optimization during ground truthing survey.	• Complete avoidance of habitation areas. • Avoidance of Reserved Forest areas. • CPR are not impacted. • It does not pass through any protected area and monuments of archaeological importance.
B	**Distribution Component**			
1	33 kV line from 132/33 kV Longleng (new) to 33/11 kV Longleng Town	Establishment of 33/11 kV Sub-station at Longleng (New)	No change in the route alignment.	NA

S. No.	Scope as per IEAR		Current Status with justification	Remarks
	Line	Substation		
	(new) Sub-station **– 5 km**			

Source: Detailed Survey of POWERGRID/ Contractor

Table 4.2: Finalized Location of Transmission & Distribution Substation

S. No.	Name of Substation	Earlier Identified Land as per IEAR	Finalized Land (Actual)	Reason for Change
A	**Transmission Substation**			
1	132/33 KV at Longleng (New)	Near Pongo village, Longleng	Adjacent to Longleng-Tuensang road, around 8.5 Km from the Longleng Town	Slightly changed due to better accessibility
2	132/33 kV at Tuensang (Bay Extension)	Within existing campus of 132/33 kV Tuensang S/S of DNP	Within existing campus of 132/33 kV Tuensang S/S of DNP	Remain Unchanged
B	**Distribution Substation**			
1	33/11 kV at Longleng Town (New)	Within existing 33/11 kV Substation, Longleng Town	Within existing 33/11 kV Substation, Longleng Town	Remain Unchanged

Source: Detailed Survey of POWERGRID/ Contractor

132/33 kV Substation at Longleng (New)

33/11 kV Substation at Longleng Town (New)

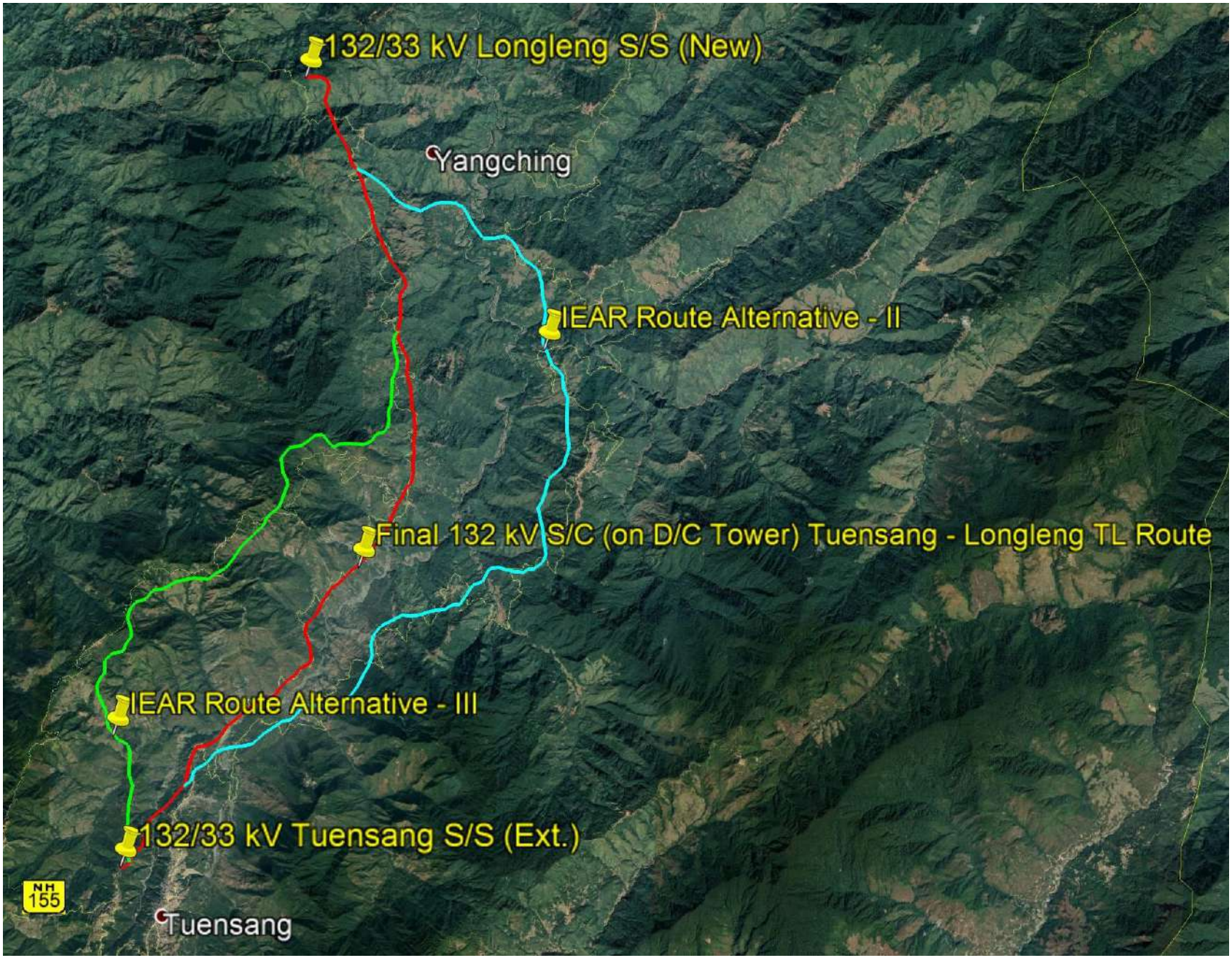

Figure 4.1: Satellite Imagery Showing Route of 132kV S/C (on D/C Tower) Tuensang – Longleng Line

Figure 4.2: Satellite Imagery Showing Route of 33 kV DL from 132/33 kV New Longleng S/S to 33/11 kV New Longleng S/S

4.3 MAJOR FEATURES OF FINAL ROUTE

4.3.1 Transmission Line

The transmission line passes through hilly terrain, comprises of agricultural field, private plantation/ lands owned by village council and Govt. land. A major portion of the transmission line passes private plantation (17.64 km), followed by agricultural land (11 km), only 0.5 km passes through Govt. land. The selected line does not have any Power line or Railway crossings. Major crossing en route of the line are National Highway 702B, 11 kV line, LT line, village roads, nala, orange garden, pond, and footpath at several locations. The line route doesn't involve any notified forest land which would necessitate forest clearance under Forest (Conservation) Act, 1980. Besides all protected areas like National Parks, Wildlife Sanctuaries, Biosphere Reserve etc.; Natural habitats, IBAs, Sacred groves, Wetlands etc. have been completely avoided.

The line length of final route (**Table 4.1**) has been slightly increased by 0.40 km, which is very negligible considering the change in total length of line i.e. from 28.74 km to 29.14 km. The line length has been increased as the location of substation is slightly changed for better accessibility. The route was further optimizated during ground truthing survey so that environment & social sensitive areas are avoided/ minimized and the route was preferred due to feasibility and lesser ROW problems (refer **Figure 4.3** to **Figure 4.5**). Though there is an increase in line length, no additional impacts of any kind apart from earlier identified impacts in IEAR/EMP are anticipated. Moreover, environment & social safeguard issues which have been taken care off are: -

- Habitation areas of 10 villages (namely Helipong, Tuensang, Taghi, Sangchen, Saoshou, Auching, Sakshi, Yimchung, Yongphang, Pongo) along the route have been completely avoided.
- Reserved Forest areas have been completely avoided
- As the Forest and Trees are minimum along the route, tree cutting/trimming are minimum.
- It is ensured that common property resources (CPR) are not impacted.
- Any areas/monuments of archaeological importance are also not encountered along the route.
- All alignments will be easily approachable in dry and rainy seasons to enable maintenance throughout the year.

The line has a total 102 towers. Since the terrain is hilly, leg extension is being utilized in towers to minimize/avoid benching/ revetment and to provide great stability. The stretches where span limit is crossed by TL, DD tower instead of DC tower and DC tower instead of DB tower along with cross-arm

strengthening has been suggested. The types of towers used are double circuit (DB, DC and DD) towers. Out of the total 102 towers, 77 towers are provided with leg extension. All alignments are easily approachable in dry and rainy seasons to enable maintenance throughout the year. To carryout construction and maintenance activity construction of new approach road is not required. Details of tower schedule of final route alignment describing important features of line route are placed as **Annexure II**.

4.3.2 Distribution Lines

The distribution line passes through hilly terrain, comprises of private plantation/ lands owned by village council and Govt. land. A major portion of the transmission line passes private plantation (4 km) and the rest 1 km passes through Govt. land. The selected line does not have any River, Power line or Railway crossings. Major crossing en route of the line is National Highway 702B at several locations. The line route doesn't involve any notified forest land which would necessitate forest clearance under Forest (Conservation) Act, 1980. Besides all protected areas like National Parks, Wildlife Sanctuaries, Biosphere Reserve etc.; Natural habitats, IBAs, Sacred groves, Wetlands etc. have been completely avoided.

There has been no change in the line length of final route as compared to line length identified in IEAR (**Table 4.1**), therefore, no additional impacts of any kind apart from earlier identified impacts in IEAR/EMP are anticipated. It is also expected that the resultant environmental and social footprints will be nil as it travels along existing road and no felling of tree will required, only lopping of tree branches will suffice for ROW clearance. The line has a total 137 poles without any railways and major river crossings. The types of poles used are Single Pole (SP), Double Pole (DP), Three Pole (3P) and Four Pole (FP). Since the line route is aligned along the existing road therefore, it avoids habitation area and agricultural land from Pole 39 to 33/11 kV Longleng sub-station (refer **Figure 4.6**). All the pole locations are easily accessible through existing road to carryout construction and maintenance activity and construction of new approach road is not required.

4.4 PROJECT IMPACTS

Based on the project details and the baseline environmental status, potential impacts due to the construction/ bay extension of sub-stations and along the final route of transmission and distribution lines have been assessed.

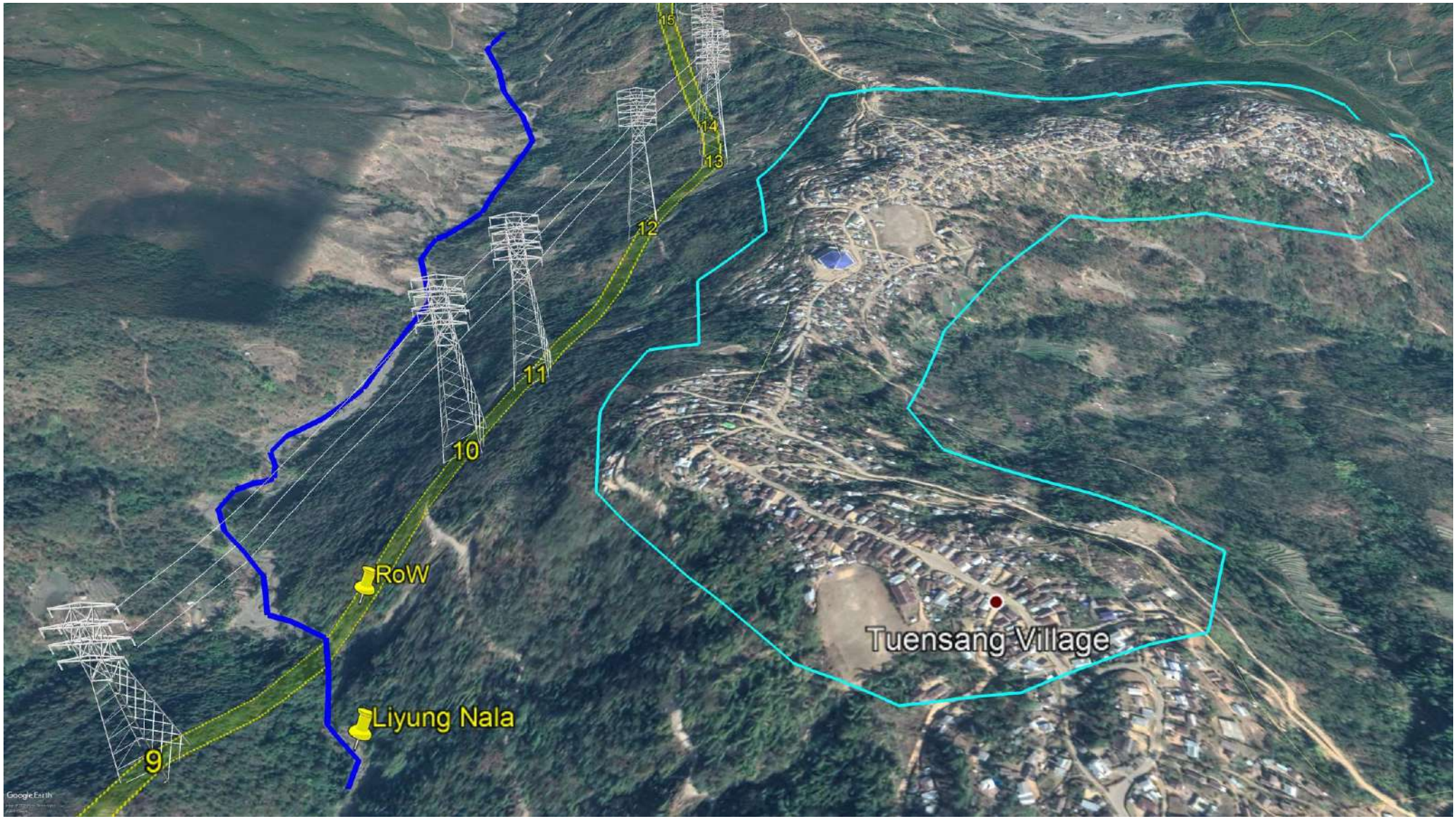

Figure 4.3: Crossing of Liyung Nala and Avoidance of Habitation Area in Tuensang Village

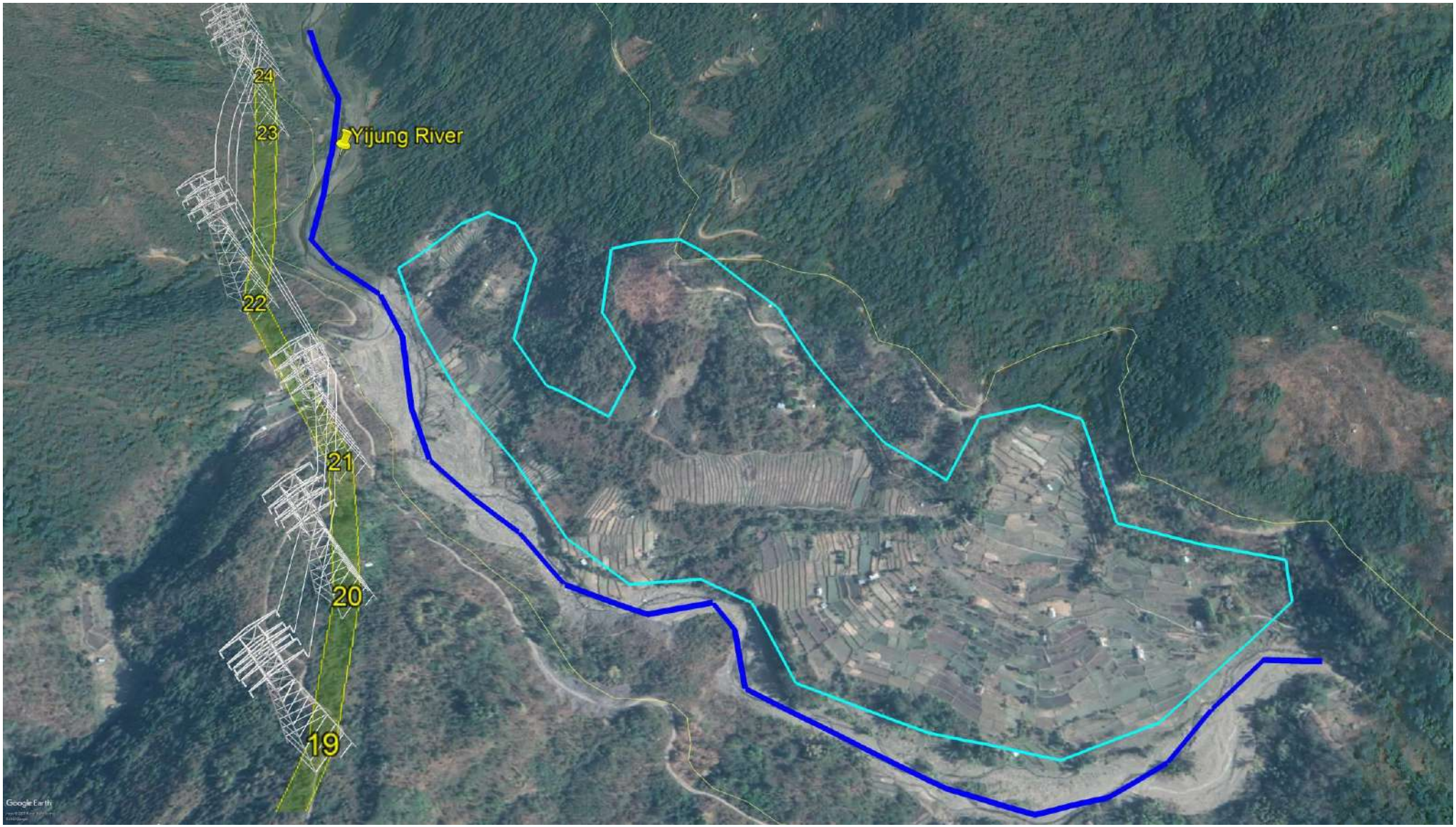

Figure 4.4: Avoided Crossing of Yijung River and Village Area

Figure 4.5: Avoided Crossing of Village Area

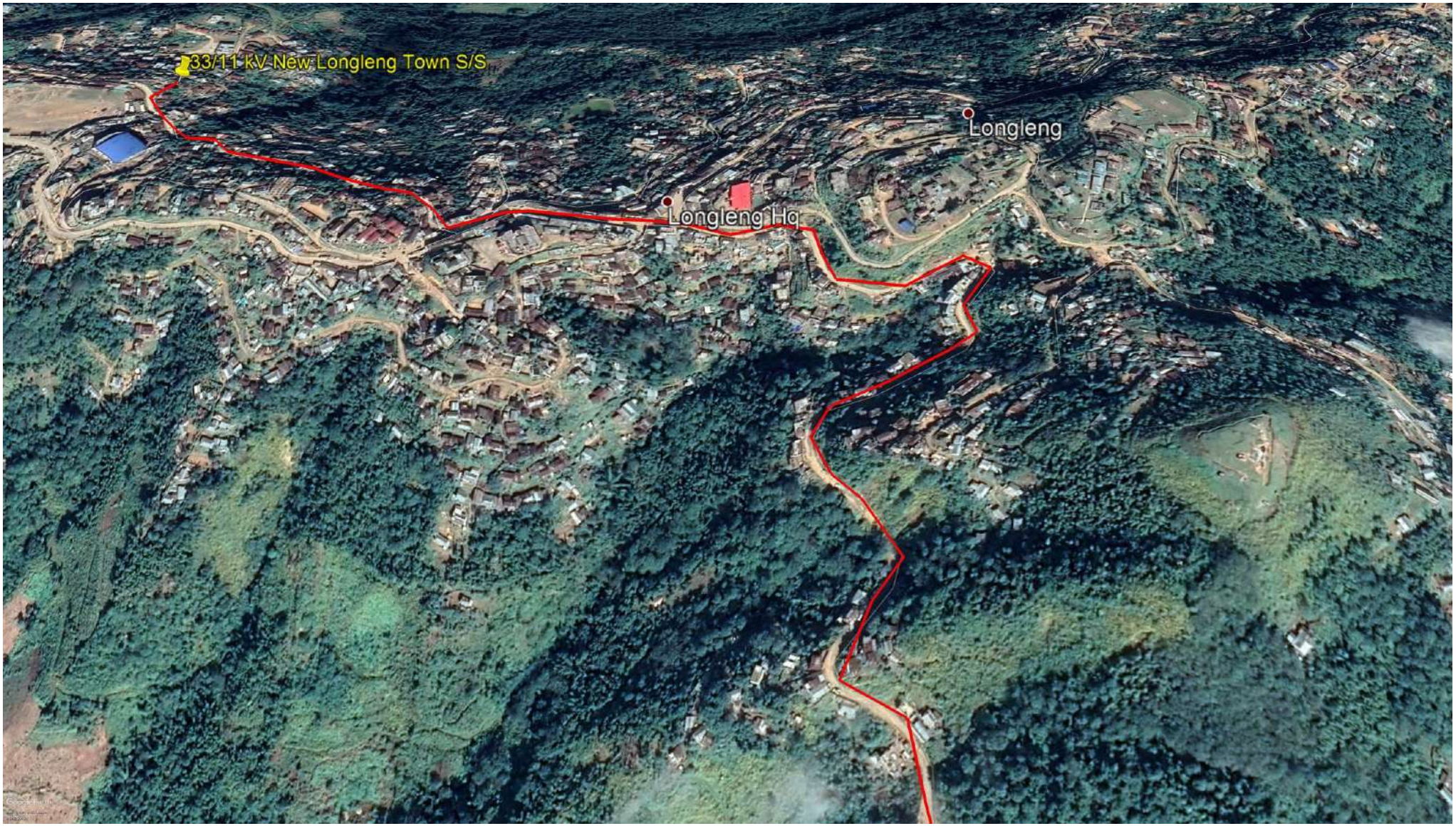

Figure 4.6: Route along the existing Road to Avoid Habitation Area at Longleng Town

4.4.1 Impact of Transmission & Distribution Lines

The project does not require any private land acquisition for construction of transmission/distribution lines. Therefore, no physical displacement is foreseen in the project. However, there are some social impacts due to construction of lines/placing of towers & poles which are temporary in nature i.e. impacts in terms of loss of standing crops/trees/structures in the RoW, which lasts during construction phase only. The construction phase itself is very limited. Detailed survey has been carried out for transmission/distribution line to estimate/ arrive at impacts.

4.4.1.1 Type and Use of Land within Corridor Right of Way

The line corridor will pass through mixed land uses which are generally agricultural land, private plantation, government land etc. The calculations are based on detailed survey/ investigation carried out along the route of transmission/distribution lines and considering the total line length of the line and its right of way. The total line length is 29.14 km which will impact an estimated of 194.41 acre of land. These include 11 km of line passing through agricultural land (73.39 acre of agricultural land), 17.64 km of private plantation (117.69 acre of private plantation land) and 0.5 km of government land (3.33 acre of government/ barren land). A brief description about the type and use of land in the corridor is given in **Table 4.3**.

Table 4.3: Type and Use of Land within Corridor of RoW

Name of Line		132 kV S/C Tuensang - Longleng	33 kV S/C Longleng – Longleng Town S/s	Total
RoW Width (m)		27	15	
Agricultural Land	**Length (km)**	11	Nil	**11**
	Area (acre)	73.39	Nil	**73.39**
Private Plantation	**Length (km)**	17.64	4	**21.64**
	Area (acre)	117.69	14.83	**132.52**
Forest Land	**Length (km)**	Nil	Nil	**Nil**
	Area (acre)	Nil	Nil	**Nil**
Govt. Land	**Length (km)**	0.5	1	**1.5**
	Area (acre)	3.33	3.71	**7.04**
Total	**Length (km)**	**29.14**	**5**	**34.14**
	Area (acre)	**194.41**	**18.53**	**212.94**

Source: Detailed Survey of POWERGRID/ Contractor

4.4.1.2 Impact on Soil & Surface Geology

In plain areas impact on soil & geology is almost negligible as the excavated pit material is stacked properly and back filled as well as used for resurfacing the area. On hill slopes where soil is disturbed and prone to erosion is suitably protected by revetment, breast walls, and proper drainage. Besides extensive leg /chimney extension is being used to avoid benching or cutting of slopes to minimize the impact on slope stability. In all there are 102 towers proposed to

be constructed in hilly terrain. Of these 102 towers, around 75% of the towers i.e. 77 are being provided with leg extension/ chimney extension.

4.4.1.3 Impact on Land for Tower Base & Pole

As per the assessment carried out in Compensation Plan for Temporary Damages (CPTD) by PGCIL, the land requirement for erection of tower legs is very small i.e. for each leg of tower actual construction is done on a small square area with side length ranging from 0.20 to 0.30 meter depending on the types of tower. Four such square pieces of land will be required to place the legs of tower. The area that becomes unavailable because of the erection of tower legs for an average 132 kV D/c transmission tower ranges from 0.16-0.36 sq m of land. Thus, the actual impact is restricted to 4 legs of the tower and agriculture can continue as clearly depicted in the **Figure 4.7**. In case of 33 kV distribution line area that becomes unavailable because of the erection of pole is insignificant as approx. 1 sq. ft. land area is occupied for one pole (refer **Figure 4.8**). Due diligence confirms that land is either agricultural or barren, and current land use is not altered and resumed after construction.

As already explained, the impact of transmission line is restricted to 4 legs of the tower and agriculture can continue after construction activity is over. The average land area will be unavailable for agriculture after erection of one 132 kV T/L tower and one pole for 33 kV D/L is approx. 0.25 sq m & 0.092 sq m, respectively. Based on above, total land loss for construction 29.14 km of 132 kV transmission line and 5 km of 33 kV distribution line proposed under the present scheme is estimated 0.008 acre. However, compensation toward loss land shall be provided to APs which is part of RoW compensation. Details of land loss for tower base & pole are given in **Table 4.4**.

Table 4.4: Estimation of Actual Loss of Land for Tower Base & Pole

S. No.	Name of Line	Line Length (Km)	Total Tower/ Pole (No)	Land loss per tower/ pole base (sq.m.)	Total land loss area for tower & pole base (sq.m)
A	**Transmission Lines**				
1	132 kV S/C Tuensang - Longleng	29.14	102	0.25	25.5
	TOTAL - A				**25.5 ≅ 0.0063 acre**
B	**Distribution Lines**				
2	33 kV Longleng – Longleng Town S/s	5	75	0.092	6.9
	TOTAL - B				**6.9 ≅ 0.0017 acre**
	TOTAL A+B		**177**		**32.4 ≅ 0.008 acre**

Source: Detailed Survey of POWERGRID/ Contractor

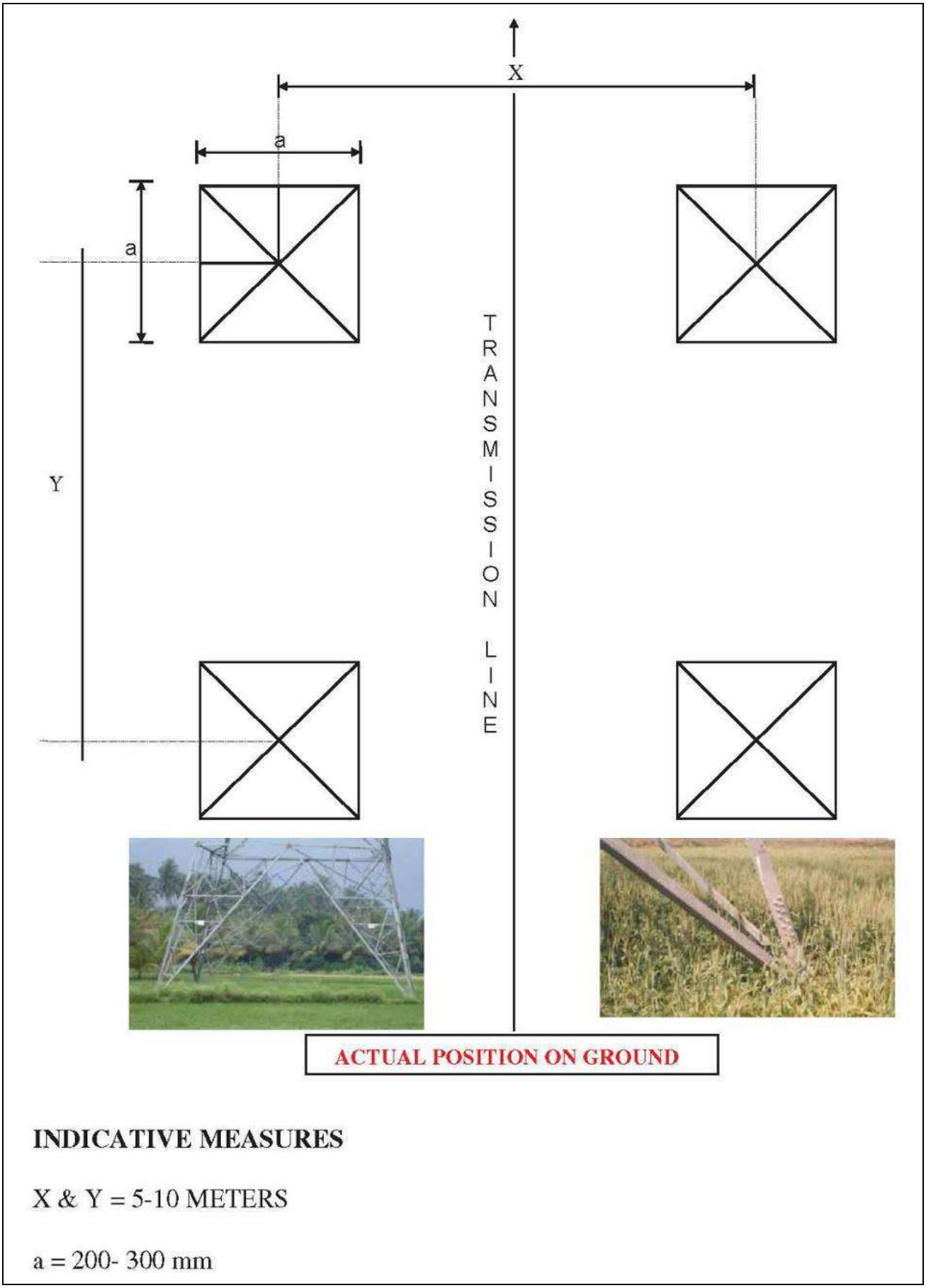

Figure 4.7: Typical Plan of Transmission Line Tower Footing

Figure 4.8: 33 kV Lines (Single & H Pole) Depicting Base Area Impact

4.4.1.4 Impact on Crop Area (RoW Corridor & Tower/Pole)

Construction of line in crop season is avoided as far as possible. In case when installation of towers/poles impacts on agricultural activity, detailed assessment/survey is conducted looking at existing crops, general crop patterns, seasonal particulars, nature and extent of yield. This data is compiled and analysed to study the extent and nature of impact.

For the temporary loss of crops, only agricultural land and private plantation land are considered for estimation. The damages are not done in complete RoW of line (27 m for 132 kV D/C) but mostly restricted to tip to tip of the conductor and tower base area where average affected width/corridor would be limited to 20 meter (maximum). In 33 kV distribution lines, damages are minimal (mostly near bi-pole/quad-pole structure) however, 10 m corridor is considered for accessing the damages. Moreover, all efforts are made to reduce the damages to crops and to minimize the impacts whatsoever. One of the reasons is that schedules of construction activities are undertaken in lean season or post-harvest periods. Assets of any sorts will not be acquired but during construction, only temporary damages will occur. Based on the above estimation, the total land considered for crop damage for transmission/distribution line corridor and tower/pole foundation for the entire subproject is 151.42 acre. Details of estimated impacted area for crop damages are given in **Table 4.5**.

Table 4.5: Estimation on Loss of Land for Crop Damage due to Overhead Lines

Name of Line	132 kV S/C Tuensang - Longleng	33 kV Longleng – Longleng Town S/s	Total
Width Considered for Estimation of Loss of Crops and other impacts (m)	20	10	
Total Agricultural Land (km)	11	Nil	**11**
Total Private Plantation (km)	17.64	4	**21.64**
Total Line Length Considered for Crop Compensation (km)	28.64	4	**32.64**
Total Land Area considered for Crop Compensation (acre)	141.54	9.88	**151.42**

Source: Detailed Survey of POWERGRID/ Contractor

4.4.1.5 Impact on Trees

Construction of line in fruit bearing season is avoided as far as possible. Tree compensation is calculated on the basis of tree enumeration, tree species and an estimate of the compensation will be calculated on the basis of 8 years yield (assessed by revenue/horticulture department).

Total numbers of trees likely to be affected due to construction of 29.14 km of 132 kV line and for 5 km of 33 kV distribution line is approx. 1690 nos., out of

which 1600 are private trees and approx. 90 trees in govt. land. Additionally, approx. 500 nos. private bamboo trees are also likely to be affected. The major species to be affected are Bamboo (*Bambusa balcooa*), Orange tree (*Citrus x sinensis*), Banana (*Musa acuminata*), Tiksung (*Tectona grandis*) & Gooseberry (Phyllanthus *emblica*). Details on number of trees for each line are given in **Table 4.6**.

Table 4.6: Loss of Trees

S. No.	Name of Line	Trees in Private Area (No.)	Trees in Govt. Area (No.)	Total Trees (No.)
A	**Transmission Lines**			
1	132 kV S/C Tuensang - Longleng	1000+500 Bamboo	60+20 Bamboo	**1060+520 Bamboo**
B	**Distribution Lines**			
2	33 kV Longleng – Longleng Town S/s	100	10	**110**
	TOTAL A+B	**1100+500 Bamboo**	**70+20 Bamboo**	**1170+520 Bamboo**

Source: Detailed Survey of POWERGRID/ Contractor

4.4.1.6 Impact on Other Assets (Small Shed in Agriculture Fields)

It has been observed during survey that approximately 1 numbers of small structures exist along the right of way of proposed transmission lines. No such structures exist along the right of way of distribution lines. These are small storage sheds/huts which are mostly temporary structure associated with the agricultural fields. People do not use these small structures/sheds for residential purpose and they use it as storage of agricultural purpose only. Details on impacts on small structures are given in **Table 4.7**.

Table 4.7: Loss of Other Assets

S. No.	Name of Line	No. of Storage Sheds/ Huts
A	**Transmission Lines**	
1	132 kV S/C Tuensang - Longleng	1
	TOTAL	**1**

Source: Detailed Survey of POWERGRID/ Contractor

4.4.1.7 Other Damages

Other damages like bunds, water bodies, fish ponds, approach paths, drainage and irrigation canals etc. are at best avoided. However, if damaged, the Revenue Department assesses the cost of damage as per State Govt. norms. The total estimate is submitted for approval to the competent authority. Payments are made to owners in the presence of local revenue authorities or village head/ Sarpanch and respective acknowledgements are obtained and POWERGRID/ DPN pays the compensation. Hindrances to power, telecom carrier & communication lines etc. shall be paid as per Govt. norms.

4.4.2 Impact Due to Construction of New Substation and Bay Extension

The project component consists of establishment/ bay extension of two 132/33 kV sub-stations i.e. at Longleng and Tuensang and one 33/11 kV sub-station at Longleng Town. However, only in case of 132/33 kV substation at Longleng, fresh lands was secured through private purchased on negotiated rates based on "willing buyer-willing seller basis". For remaining new and bay extension of the EHV and DMS substations land is already available with DPN. Since involuntary acquisition is involved, R&R will not be an issue in the instant project. The details are provided in **Table 1.6** of Chapter 1.

The other environmental impacts that impact environment due to construction/ bay extension of sub-station are uncontrolled silt runoff, nuisance to nearby area, inadequate resurfacing for erosion control, inadequate disposition of borrow area, workers health/ safety. All these impacts and their management are discussed in detail in Chapter 5.

Another impact is construction of access road. Access to all the new/ existing sub-stations will be along existing roads or village paths; minor improvements to paths may be made where necessary. Only major construction of road i.e. for 132/33 kV sub-stations at Longleng where approach road of 1.5 km is under implementation will be necessary during construction.

The approach road of 1.5 km for 132/33 kV Longleng sub-station is proposed from existing road to sub-station. Presently, it is an existing foot path only on community land, being used by villagers for movement from their home to agricultural field. Since the approach road will be utilized during construction phase only, whereas for villagers it will be a permanent upgradation of their footpath to road, therefore, villagers have given their consent for this expansion. In many areas such improvement in the access road is highly appreciated by the local population. Since none of these segments require any additional land and thus have insignificant environmental and social impacts, these would fall in low risk category as per E & S screening criteria.

Construction of road may lead to soil erosion, increase the airborne dust particles, nuisance to nearby area, require land for temporary accessibility etc. Impacts due to road construction and its management is discussed in detail in Chapter 5.

4.4.3 Impact on Indigenous People

Government of India, under Article 342 of the Constitution, considers the following characteristics to define indigenous peoples [Scheduled Tribes (ST)]:

i. tribes' primitive traits;
ii. distinctive culture;

iii. shyness with the public at large;
iv. geographical isolation; and
v. social and economic backwardness before notifying them as a Scheduled Tribe.

Essentially, indigenous people have a social and cultural identity distinct from the 'mainstream' society that makes them vulnerable to being overlooked or marginalized in the development processes. STs, who have no modern means of subsistence, with distinctive culture and are characterized by socio-economic backwardness, could be identified as Indigenous Peoples. Indigenous people are also characterized by cultural continuity. Constitution of India identifies schedule areas which are predominately inhabited by such people.

The State of Nagaland is pre-dominantly a tribal state with > 89% population, inhabited by 16 major tribes under the umbrella term of the 'Naga', and along with a number of sub-tribes. Accordingly, special provision has extended to the State under Article 371 A of the Constitution of India which provides "no act of parliament in respect of religious and social practices of the Naga, Naga customary laws and procedures, administration of civil and criminal justices involving decisions according to Naga customary law and ownership and transfer of land and its resources shall apply to the state of Nagaland, unless Legislative Assembly of the state, by a resolution, so decides.

Since, the project under NERPSIP is envisaged for economic uplifting of the NE region, hence, no indigenous population will be negatively impacted in the project area. However, It may be noted that all social issues shall be dealt separately in accordance with the provisions of Social Management Framework (SMF, A-C) placed in the Further, It may be noted that all social issues shall be dealt separately in accordance with the provisions of Social Management Framework (SMF, A-C), placed in the ESPPF of DPN".

4.4.4 Summary of Impacts

Based on the above analysis of final route of transmission and distribution lines and location of EHV and DMS sub-stations, the summarized environmental & social impact matrix is presented below in **Table 4.8**.

Table 4.8: Summary of Impacts

S. No.	PARAMETERS	EXTENT OF IMPACT
1. A.	**Total Line length -** (TL -29.14 km, DL- 5 km)	The TL length has slightly increased by 0.40 km, while there is no change in the DL length. Though final route length of TL has slightly increased, still no additional impacts of any kind apart from earlier identified impacts in IEAR/ EMP are anticipated as there is no change in land use and other base line data. Moreover, changes in the final

S. No.	PARAMETERS	EXTENT OF IMPACT
		route length have been made as the location of substation is slightly changed for better accessibility and so as to avoid/ minimize environment & social sensitive areas. As compared to IEAR, no additional impacts are anticipated.
B.	**Terrain:**	Both the lines are passing through hilly area, also all 3 sub-stations are in hilly area. Hence, provisions for revetment, breast walls, and proper drainage etc. have been made. Besides extensive leg /chimney extension is being used to avoid benching or cutting of slopes to minimize the impact on slope stability.
2.	Forest land traversed (km)	No notified forest. Only private plantation of approx. 22 km of total line length having vegetation encountered. It is estimated that maximum 1170 trees and 520 bamboo will be felled. Further, in hilly area due to additional height gain of towers and availability of adequate clearance tree felling will be further minimized.
3.	Forest type	NA
4.	Forest density	NA
5.	Rare/endangered flora	No rare/endangered flora found in project area.
6.	Rare/ endangered fauna	No rare/endangered flora found in project area.
7.	Migrating Wildlife/ breeding ground	NA
8.	National Park / sanctuaries	No protected areas involved
9.	Wet land traversed	None
10.	Soil erodibility	Low
11.	Historical / Cultural monuments	None
12.	Total Affected Persons (APs)	As per assessment carried out under CPTD, total APs are 170, of which 100 are due to TL and 70 due to DL. All APs will be compensated as per the Govt. norms.
13.	Relocation of villagers	None
14.	Area of actual land loss under Tower Base	Total 0.008 acre of actual loss of land will be taking place under tower/ pole base, of which 0.0063 will be under tower base and 0.0017 under pole. This loss is temporary in nature i.e. during construction time only. APs will be compensated for actual land loss.
15.	Affected Structures	Only 1 small sheds being used for agricultural purpose shall be affected due to TL. AP will be compensated for affected structures.
16.	Temporary Damage to Crop	Total 151.42 acre of area has been estimated to come under temporary damage to crop. This loss is temporary in nature i.e. during construction time only. APs will be compensated for actual land loss.
17.	Loss/ Hindrance to Public Utilities	Negligible, restricted to construction phase only.

Chapter 5 POTENTIAL ENVIRONMENTAL IMPACTS, EVALUATION AND ITS MANAGEMENT

5.1 INTRODUCTION

Environmental impacts of Transmission & Distribution (T & D) projects are not far reaching and are mostly localized to RoW (refer **Table 5.1**). However, T & D projects have some effects on natural and socio-culture resources. All possible measures have been taken during the finalization of route alignment as described in the earlier chapter for the proposed transmission/distribution system, however, due to the peculiarity of terrain where project is being implemented, some environmental impacts may be there. The explanations in brief with regard to possible environmental impact and measures taken to minimize the same are given in ensuing paragraph.

Table 5.1: RoW Width & Clearance between Conductors and Trees

Transmission Voltage	Max. RoW (m)	Min. Clearance (m) between conductor & Trees
132 kV	27	4.0
33 kV	15	2.8

5.2 IMPACT DUE TO PROJECT LOCATION AND DESIGN

5.2.1 Resettlement

Land is required for

a) erection of towers/ pole for transmission and distribution lines and

b) construction of substations.

As explained in previous chapter during line routing stage itself all measures have been undertaken by IA to avoid settlements such as cities, villages etc. in line with the guiding principle of avoidance as per ESPPF. During detail survey modern techniques/tools like GIS, GPS, and aerial photography were utilized to further optimization the final route alignment avoiding human habitation and other ecological and socially sensitive areas. Moreover, the project does not require any resettlement of villagers as no land is acquired for tower/pole foundation as per existing law.

The present project involves construction of 1 new 132/33 kV sub-stations at Longleng for which 8.1 acre of fresh land from 7 private persons have been secured through private purchase on willing–buyer and willing-seller basis on

negotiated/market rate. Apart from this, for the construction of new 33/11 kV sub-station at Longleng Town, 0.52 acre of Govt. land has been provided by DPN. In addition, the bay extension work at Tuensang sub-station is being undertaken in the already existing DPN sub-station premise and no acquisition of fresh land was required for this purpose. Since, no involuntary acquisition was involved and fresh lands were secured only through private purchase there is no R & R and resettlement issues.

5.2.2 Land Value Depreciation

It is evident that electric power being an enabler sector acts as a catalyst for the growth and development of areas having accessibility to it. Based on past experience land prices are generally expected to rise in the areas receiving power. In the present project, transmission lines pass through agriculture fields, private plantation area and govt. land (mostly uninhabited and scrub land), where the land-use is not going to change in foreseeable future. Therefore, the value of land is not adversely affected to a significant degree. Moreover, distribution lines are primarily intended to provide power supply to populated area which boost the economic status as well as land price of the area, thus, outweighing possible negative impacts, if any.

5.2.3 Historical/Cultural Monuments/Value

Final routes of transmission and distribution line and sites for construction of new sub-stations don't involve any monuments of historical or cultural significance.

5.2.4 Encroachment Into Precious Ecological Areas

In accordance with the policy of route selection, IA/Utility have taken all precautions right from the planning stage itself to avoid routing of line through forest, protected areas like national park, wildlife sanctuary, biosphere reserve/ biodiversity hotspot and other ecological sensitive areas. In the instant scheme, forest area covered under Forest (Conservation) Act, 1980 has been completely avoided with careful selection of route alignment, therefore, provisions of the Forest (Conservation) Act, 1980 shall not prevail. However, in case of felling of trees in non-designated forest areas i.e. areas under the control of individual/community/village councils, mitigation measures as referred in ESPPF shall be undertaken. The mitigation measure as suggested in ESPPF for minimizing adverse impact on forests in non-designated forest areas states that DPN/IA shall provide fund for compensatory afforestation for planting 3 trees for every tree to be felled subject to availability of land. Accordingly, provision of Rs. 177 lakhs (@ 1 lakh/km) has been kept in budget towards voluntary afforestation program in

the ratio of 1:3. The estimated no. of tree to be felled are 1170, additionally 520 bamboo trees are also likely to be affected. In addition, suitable management measures like minimizing RoW requirement, use of tall or extended tower (3-9 m) etc., wherever feasible, is being undertaken to minimize the loss of vegetation.

5.2.5 Encroachment into Other Valuable Lands

The final route of transmission and distribution line passes through agricultural land (approx. 32%), most through private plantation (approx. 63%) and the remaining approx. 5% passes through govt. land. As per existing law, land for tower/pole & right of way is not acquired and ownership of land remains with the owner and agricultural activities are allowed to continue after construction activity. However, as per existing laws compensation for all damages (tree/crop) are paid to the individual land owner. Additionally, land compensation @100% land value for tower base is also paid to land owner as per prevailing practices. In case of 33 kV distribution line, area that becomes unavailable because of the erection of pole is insignificant as approx. 1 sq. ft. land area is occupied for one pole. As already given in Table 4.4, total land loss area for 75 poles is only 0.0017 acre, therefore, land value for pole base is not considered for land compensation.

In the instance case all the 102 nos. tower locations are coming either on private land or community land or govt. land. Since the tower locations are coming under various villages of 2 districts, No Objection Certificate (NoC) from concerned land owner/ Headman /Village Council is being obtained **(Annexure III)**. The agriculture, horticulture departments have been approached to determine the rates of compensation for the paddy fields and rubber/ tea/ coffee respectively. Similarly, for land compensation the land rate has been fixed by District Collector/ ADCs. In line with the compensation procedures laid down in ESPPF & CPTD, compensation towards damage to tree/crop and land diminution value have been paid to affected persons after assessment of actual damage based on market rate and verification by concerned revenue authorities. A sample case of compensation payment including notice to land owner, assessment and verification by revenue authority and payment to affected person etc. is enclosed as **Annexure IV**.

The crop & tree compensation and land compensation for tower base and corridor is yet to commence for the transmission line. Therefore, the status upto March 2020 is yet to commence.

5.2.6 Interference with other Utilities and Traffic

As per regulations, it is mandatory for IA/Utility to seek clearance prior to construction from department of Railways, Telecommunications and wherever necessary from aviation authorities that are likely to be affected by the construction of transmission lines. The transmission and distribution lines do not interfere with telecommunication towers. Further, railway lines and aviation routes are not present in the project locations. It is therefore not required to avail clearances from Department of Railways, Department of Telecommunications, and the Ministry of Aviation.

As regard inference with traffic, it is to may be noted that National Highway-702B is the main roads which connect various subproject areas including the sub-station sites through various state roads, district roads and village roads. Traffic on NH-702B is very less. However, as expected that execution of the projects covered in this report has not resulted in any steep rise in traffic volume. Further, the present project requires very less vehicular movement and that too restricted to construction period only. Hence, no steep rise in traffic volume is anticipated/ observed.

5.2.7 Interference with Drainage Pattern

As the transmission lines are constructed aerially and the blockage of ground surface is limited to area of tower footings, which is very small, there is little possibility of affecting drainage pattern. The transmission & distribution lines proposed under this scheme don't involve any tower/ pole to be placed in river bed which could interfere with existing drainage patterns. Infact crossing of river has been completely avoided. Further, to avoid any interfere, DD towers instead of DC towers and DC towers instead DB towers are being used as single span limit is crossed in the stretches where TL/ DL is crossing nala, cross-arm strengthening has been suggested. Also, as mentioned in previous chapter, use of leg extension is being made in towers to minimize/avoid benching/ revetment, to minimize/ avoid chances of soil erosion, to minimize/ avoid sedimentation of river, to provide great stability. Another measure already suggested in EMP and in place is to avoid dumping of fill materials in sensitive drainage area. In case of substations, all drainage channels along or inside substations are being trained and connected to main or existing drainage to avoid any erosion due to uncontrolled flow of water.

5.3 ENVIRONMENTAL PROBLEMS DUE TO DESIGN

5.3.1 Escape of Polluting Materials

The equipment installed on lines and substations are static in nature and do not generate any fumes or waste materials. However, detailed specification

with respect to equipment design and substation drainage and sewage design has been included in tender document to avoid any incidence of land and water contamination. Transformers have been designed with oil spill containment systems having sump of capacity of 200% of oil volume of largest transformer, and purpose-built oil, lubricant and fuel storage system, complete with spill cleanup equipment. Substations include drainage and sewage disposal systems to avoid offsite land and water pollution. Apart from this, solid waste like packing materials, cables, aluminum conductor, sand, aggregate material, cements and steel generated during construction is carefully handled and removed from the sites periodically to avoid any contamination. Same can be figured out with the help of photographs placed below. Also, the system helps in avoiding accidents through contamination, spills and fire.

Arrangement to avoid contamination at under construction New 33/11 kV S/S at Longleng

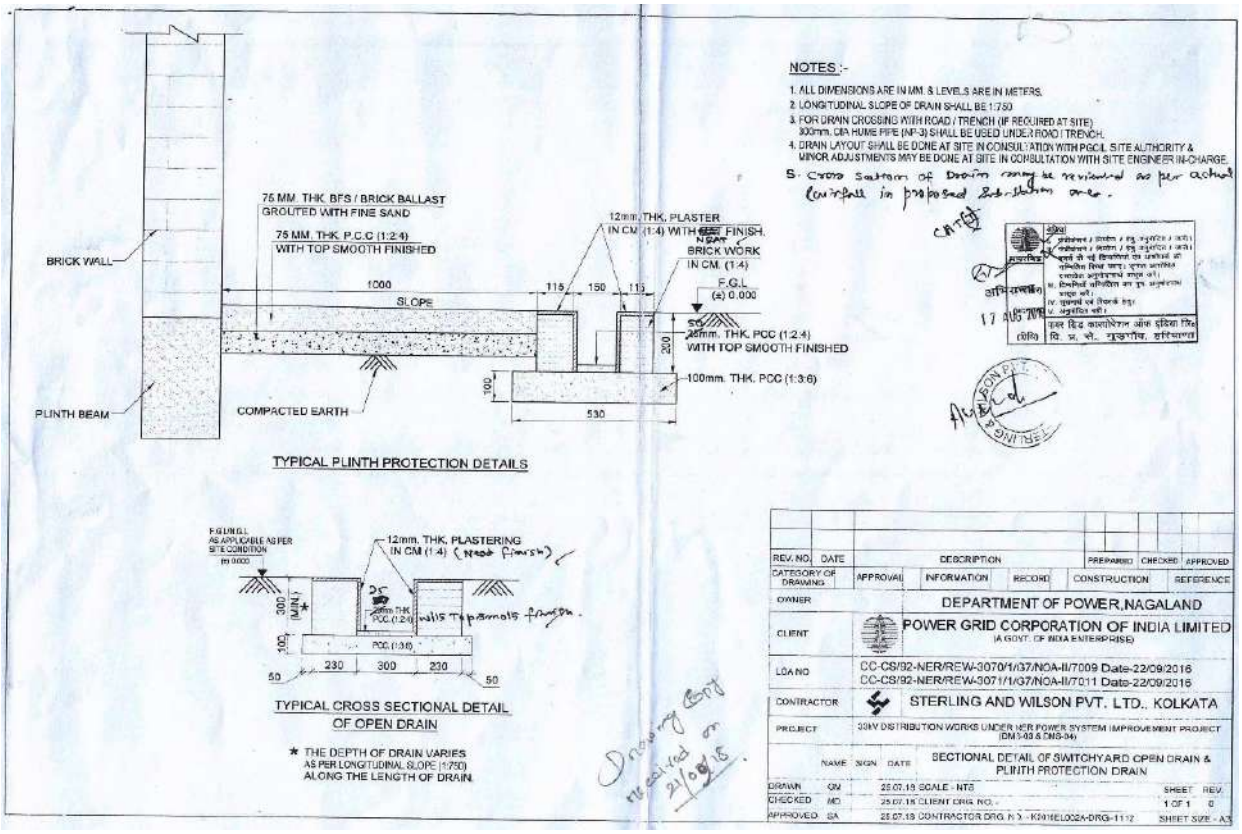

Sectional Detail of Switchyard Open Drain & Plinth Protection Drain

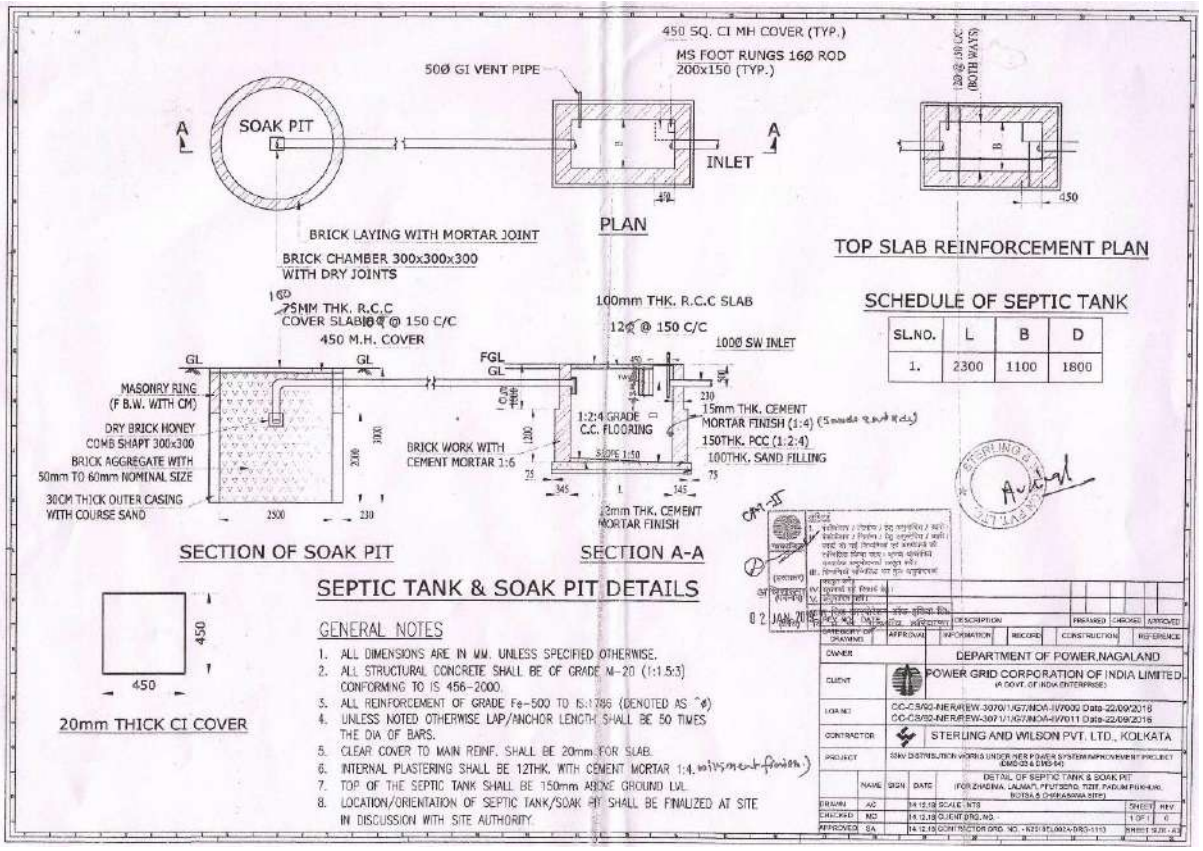

Details of Soak Pit & Septic Tank

5.3.2 Explosion/Fire Hazards

During the survey and site selection for transmission lines, and substations, it has been ensured that these are kept away from oil/gas pipelines and other sites with potential for creating explosions or fires. Fires due to flashover from lines can be a more serious problem in forest. However, adequate safety measures are taken to avoid such incidence. In the present project, the route line routes and substations are not located close to the vicinity of oil/gas pipelines or other installations with potential fire/ explosion hazard. Apart from this, automatic tripping mechanism for transmission/distribution and substations are being installed so that line gets disconnected in fraction of seconds to prevent fire hazards. Also, fire wall between transformers are being constructed to prevent fire from spreading. Firefighting instruments including fire extinguishers are kept in appropriate place for immediate action in case of any fire hazard.

5.3.3 Erosion Hazards due to Inadequate Provision for Resurfacing of Exposed Area

Construction of 132kV line involves only small scale excavation of area i.e. 3m L x 3m W x 3m H for tower footing that may result in generation of 108 m^3 of excavated material from each tower. In case of 132/33 kV substation foundation, excavation of soil to the tune of 7500 m^3 is required depending on site condition. Similarly, in case of 33 kV line, soil excavation is limited to 0.72

m^3 for each pole, and for 33/11 kV sub-station, excavation of around 2000 m^3 is required. It has been worked out that a total of approximately 20,570 m^3 (102x108 + 1x7500 + 75x0.72 + 1x2000) of excavated materials gets generated for construction of 100 nos. of tower, 1 no of 132 kV substations, 70 nos. of poles and 1 no of 33/11 KV substations proposed under present scheme. However, all the soil excavated for tower/pole footings and substations construction are optimally (about 80-90%) utilized for backfilling and the remaining soil being spread evenly and compacted. Topsoil disturbed during the development of sites are used to restore the surface of the platform. Infertile and rocky material are dumped at carefully selected dumping areas and used as fill for substation/ and tower/pole foundations. Hence, possibility of erosion of exposed area due to construction activity is negligible.

5.3.4 Environmental Aesthetics

Since spacing between the towers/poles in case of 132 kV transmission & 33 kV distribution lines is approximately 300 meter and 100 meter respectively, these don't affect the visual aesthetics of the localities particularly when it is ensured to route the lines as far away from the localities as possible. DPN takes up plantation of trees to buffer the visual effect around its substations and to provide better living conditions. Wherever DPN feels it appropriate, discussions are held with local Forest Department officials to determine feasibility of planting trees along roads running parallel to transmission lines to buffer visual effect in these areas. In addition, towers are painted grey or green to merge with the background.

5.3.5 Noise/Vibration Nuisances

The equipment installed at substation are mostly static and are so designed that the noise level always remains within permissible limits i.e. 85 dB as per Indian standards. Transformers with maximum noise emitting level of 75 dB and DG set with proper enclosures are part of equipment specification/ design criteria. Some noise is unavoidable during construction phase like noise produced by concrete mixing equipment and excavators which are temporary and only in day time. However, regular monitoring by IA/Contractors and due maintenance of equipment are ensured to keep the noise level well within the prescribed limit. Further, to contain the noise level within the permissible limits whenever noise level increases beyond permissible limits, measures like providing sound and vibration dampers and rectification of equipment are undertaken. In addition, plantations of sound absorbing species like Casuarinas, Tamarind, and Azadrichta are raised at the substations that reduce the sound level appreciably.

5.3.6 Blockage of Wildlife Passage/ Impact on Avifauna

The proposed transmission & distribution lines are not passing through any forest area, wildlife area. Since there is no protected area or demarcated/ documented migration path of wildlife like elephant corridor existing near to subproject locations, hence, possibility of any disturbance to wild life is not imminent.

Avian hazards mostly encountered in bird sanctuaries area, IBAs and fly path of migratory bird predominantly related to nesting site. Since in the instant case due to routing of line away from such areas, bird hit/electrocution is not anticipated. Although the incidence of avian hazards is rare due to the distance between the conductors, however, as an additional measure to prevent any avian hazards, bird guards/ anti perch devices are part of BoQ and also integral part of tower design (drawing attached as **Annexure V**).

5.4 ENVIRONMENTAL PROBLEMS DURING CONSTRUCTION PHASE

5.4.1 Uncontrolled Silt Runoff

Location of all the towers/poles are on hilly terrain, therefore, tower/ pole have been positioned on hilltops and where ever positioning of tower on hill top is not possible leg extension is being utilized so as to minimize/ avoid benching/ revetment and to provide great stability and to eliminate/minimize the chances of silt runoff/ soil erosion. Out of total 102 towers to be erected approx. 75% (77 no.) are with leg extension. The excavated material will be backfilled and any remaining earth, if any will be spread around the base and compacted. In case of distribution lines all the excavated soil is backfilled and compacted after erection of tubular poles.

In case of sub-station, existing one are located on flat land and adjacent to existing road and new ones are also being constructed on flat land after site clearing and leveling. It is also being ensured that new sub-stations are close to existing road and construction of approach road is avoided as far as possible, however, in some cases i.e. 132/33 kV sub-stations at Longleng approach road of 1.5 km is under implementation.

As already explained, during construction limited quantity of excavated material is generated from tower/pole foundations and sub-station foundation. However, adequate measures have been taken to store excavated materials properly for refilling after construction is over. Further, excavation in the hilly areas is avoided in rainy days. Hence, uncontrolled silt run off is not anticipated. However, during construction, precautions are being taken by contractors, boundary/ retaining/ breast walls are being constructed to avoid

any such runoff of excavated material from the construction sites. Moreover, sub-stations are being constructed above the high flood level (HFL) by raising the foundation pad, therefore, are not prone to flooding/ erosive losses of soil.

Refilling and levelling of excavated material at new 33/11 kV sub-station at Longleng Town have been demonstrated with the help of photographs taken during the field visit. However, at new 132/33 kV sub-station at Longleng only clearing of vegetation work has been completed and leveling of surface and construction of protection/ retaining walls is yet to be start.

Refilling and leveling work at new 33/11 kV Substation at Longleng Town

New 132/33 kV Substation Site at Longleng

5.4.2 Nuisance to Nearby Properties

During site selection due care is taken to keep the transmission & distribution lines and substations away from settlements. Further, all the construction activities are undertaken through the use of small mechanical devices e.g. tractors and manual labour, therefore, nuisance to the nearby properties if any, is not expected. The construction activities are normally undertaken in lean period and post harvesting to avoid/minimize such impact. All construction sites of new sub-station are prohibited for general public both due to its separation/demarcation by boundary wall and also due to statutory provisions. Hence, any adverse impact arising during the construction of

substation is temporary i.e. will last during construction phase only and limited to the boundaries of proposed substation only and neither impacts nearby habitat/property nor health & safety of neighboring community.

Since the construction of new 33/11 kV sub-station is within the existing 33/11 kV sub-station therefore demarcation by barbed wire fencing is already in place, in addition a boundary wall is being constructed. At new 132/33 kV sub-station site construction of boundary wall around the sub-station sites is yet to start. Site in-charge of IA ensured that all the protection wall will be constructed as per approved designs.

Fencing and under construction boundary wall 33/11 kV DMS site Longleng

132/33 kV Substation Site Longleng

5.4.3 Interference with Utilities and Traffic and Blockage of Access Way

Since all the locations of subprojects are not well connected through rail link, transportation of construction materials will be mostly through road network. Access to the site will be along existing roads or village paths; minor improvements to paths may be made where necessary, but no major construction of roads, except, 132/33 kV sub-stations at Longleng where approach road of 1.5 km is under implementation.

The approach road was a foot path only being used by villagers for movement from their home to agricultural field. Since it was a foot path which leads to

nothing but agricultural field, therefore, interfere with utilities and traffic and block the access way is not at all expected. In many areas such improvement in the access road is highly appreciated by the local population. Moreover, since none of these segments require any additional land and thus have insignificant environmental and social impacts, these would fall in low risk category as per E & S screening criteria.

The transmission and distribution lines do not interfere with telecommunication towers. Further, railway lines and aviation routes are not present in the project locations. Therefore, interfere with utilities and block the access way in this regard is also not at all expected. As and when a transmission line crosses any road, the short span angle (DT) towers are located at a distance so as not to cause any hindrance to the movement of traffic. Stringing at the construction stage is carried out during lean traffic period in consultation with the concerned authorities and angle towers are planted to facilitate execution of work in different stages.

5.4.4 Inadequate Resurfacing for Erosion Control

As explained earlier, majority of tower/pole locations hilly terrain, therefore, tower/ pole have been positioned on hilltops and where ever positioning of tower on hill top is not possible leg extension is being utilized so as to minimize/ avoid benching/ revetment and to provide great stability. However, till date no instances with potential of erosion observed during construction of above said lines. Further, construction is generally undertaken in dry/non-monsoon period.

During field visit it was observed that construction work is in progress only at new 33/11 kV sub-station site and no such issue was observed regarding soil erosion at this site. IA staff/ engineers assured that as per approved design protection wall will be constructed all along the boundary of the new substation sites.

Refilling of excavated soil to avoid Soil erosion

5.4.5 Inadequate Disposition of Borrow Area

As mentioned earlier the tower/pole foundations involve excavations on small scale basis and the excavated soil is utilized for back filling. In case of substations, generally the sites are selected in such a manner that the volume of cutting is equal to volume of filling avoiding borrowing of the area. As such acquisition/opening of borrow area is not needed.

5.4.6 Protection of Worker's Health/Safety

All health & safety issues and their management aspects are integral part of project/contract specific safety plan **(Annexure VI)**, which is also part of contract conditions. Various aspects such as, work and safety regulations, workmen's compensation, insurance are adequately covered under the General Conditions of Contract (GCC), a part of bidding documents. Project is being executed as per the approved plan and is regularly monitored by dedicated Safety personnel. Moreover, for strict compliance of safety standard/plan a special provision as a deterrent has been added in the contract which provides for a heavy penalty of Rs.10 lakhs for each accidental death and Rs 1.0 lakh for each injury and is deducted from the contractor's payment and paid to the deceased/affected family **(Annexure VII)**.

Additionally, work and safety regulations, workmen's compensation, insurance are adequately covered under the General Conditions of Contract (GCC), a part of bidding documents. The project authority ensures that all contractors are operating with valid labor license as per provision under section – 12(1) of the Contract Labour (Regulation & Abolition) Act, 1970 and also certified under Section- 7(3) of the Building and Other Construction Workers (Regulation of Employment and Condition of Service) Act, 1996 from Ministry of Labour & Employment. Besides, the contractors have obtained requisite insurance policy as per provisions of Employee Compensation Act, 1923 for its employed workforce. Sample copy of labor license and insurance policy for workers is attached as **Annexure VIII**.

During construction work, safety guidelines/checklists including work permits and safety precautions are being strictly followed which are also regularly monitored by site in charge. Sample copy of filled checklist is enclosed as **Annexure IX**.

At the time of site visit construction work at new 33/11 sub-station at Longleng Town was on hold due to Christmas/ New Year vacation. Site in-charge of IA agency and Engineers of DPN informed that contractor follow all the Health and Safety norms as per approved Health and Safety Plan.

However, it was noticed that at construction sites, supervisors/ engineers of contractor as well as officials of DPN & IA staff were seen without any PPEs during site inspection and monitoring of construction work. During consultation with supervisors/ engineers of contractor as well as officials it was observed that limited available workers at the site were not aware about their health and safety during construction. These are due to the lack of induction and training programme as committed in Health and Safety Plan.

Lack of use of PPEs

Safety Plan (**Annexure VI**), an action plan to mitigate and manage such issues already forms an integral part of agreement/ contract conditions signed by the respective contractors. It is the duty of safety officer/ site in charge/ IA to ensure that safety plan is being strictly followed to avoid any untoward incidence. The IA on their part carries out routine safety check/ audits, informs the contractor and seeks their compliance on the same. It has been observed that safety plan signed and submitted by contractor is sufficient enough to avoid any untoward incidence and thus, any other additional action plan to mitigate and manage such issues may not be needed.

5.5 ENVIRONMENTAL PROBLEMS RESULTING FROM OPERATION

5.5.1 O&M Staff/Skills Less Than Acceptable Resulting in Variety of Adverse Effects

The O& M program is normally implemented by substation personnel for both the lines as well as substations. Monitoring measures employed include patrolling and thermo-vision scanning. The supervisors and managers entrusted with O&M responsibilities are intensively trained for necessary skills and expertise for handling these aspects. A monthly preventive maintenance program is carried out to disclose problems related to cooling oil, gaskets, circuit breakers, vibration measurements, contact resistance, condensers, air handling units, electrical panels and compressors. Any sign of soil erosion is

also reported and rectified. Monthly monitoring reports are generated and appraised to Management, including a report of corrective action taken and a schedule for future action.

DPN follows the best international practices while designing its system to maintain acceptable prescribed Electro Magnetic Field (EMF) level. The ICNIRP guideline for acceptable EMF level for the general public (up to 24 hours a day) is a maximum exposure level of 1,000 mG or 100μT. Further, because of health and safety issues such as fire safety, safe voltages on metallic parts of buildings, and safety clearances to avoid flashover, the transmission lines do not pass directly over any residential properties and as such the potential for EMF effects to occur is further diminished.

Poly Chlorinated Biphenyls (PCBs) due to their high heat capacity, low flammability and low electrical conductivity were extensively used as insulating material in capacitors and transformers. But after the finding that these PCBs are non-biodegradable and have carcinogenic tendency, their use in electrical equipment as insulating medium has been banned all over the world long back. However, it has been reported in some studies that chances of contamination of oil with PCB is possible. Keeping that in mind, DPN has discontinued procurement of electrical equipment containing PCB more than 2 mg/kg and specification (as per IEC 61619 or ASTM D4059) is being stated in the tender document. Moreover, the subject scheme doesn't involve replacement of any PCB containing equipment, hence no disposal of such equipment is anticipated.

5.6 CRITICAL ENVIRONMENTAL REVIEW CRITERIA

5.6.1 Loss of Irreplaceable Resources

In the instant project none of the project elements encroach upon any forest area, protected areas, and ecologically sensitive areas hence, the problem of losing natural resources is not anticipated.

5.6.2 Accelerated Use of Resources for Short-term Gains

The subprojects are not making use of any natural resources occurring in the area during construction and are not utilizing the same during maintenance phases. The construction material such as tower members, cement etc. are being sourced from factories while the excavated soil is being reused for backfilling to restore the surface. During construction of transmission line, very small quantity of water is required which is met from nearby existing source or through tankers. However, for substation water requirement is met mostly by ground water derived by digging a borewell during construction as

well as for operational stage. Moreover, provision of rain water harvesting in all proposed substations under the present scheme has been made to conserve precious water resources and enhance the ground water level. The aggregates used for construction are already available within sub-station area due to cutting, thus no new borrow area will be created. Hence, it may be seen that the activities associated with implementation of subject project shall not cause any accelerated use of resources for short term gain.

5.6.3 Endangering of Species

As described earlier, no endangered species of flora and fauna exist in the subprojects area is getting affected and considering aerial nature of transmission and distribution project, there is no possibility of endangering/ causing extinction of any species.

5.6.4 Promoting Undesirable Rural-to Urban Migration

The subprojects will not cause loss of land holdings that normally trigger migration. It also does not involve resettlement due to acquisition of any private land holdings. Hence, there is no possibility of any migration.

5.7 PUBLIC CONSULTATION

Public consultation/ information dissemination is a continuous process starting with the project conception and continues during project implementation and even during O&M stage. Public is informed about the project at every stage of execution. During survey, DPN & POWERGRID site officials met people and informed them about the routing of transmission and distribution lines. During the construction, every individual, on whose land tower is erected and people affected by RoW, were consulted. Apart from this, Public consultation using different technique like Public Meeting, Small Group Meeting, informal Meeting have been carried out during different activities of project cycle. During such consultation, the public is informed about the project in general and in particular about the following:

- Complete project plan (i.e. its route and terminating point and substations, if any, in between);
- Design standards in relation to approved international standards;
- Health impacts in relation to EMF;
- Measures taken to avoid public utilities such as school, hospitals, etc.;
- Other impacts associated with transmission & distribution lines and DPN approach to minimizing and solving them;
- Trees and crop compensation process.

In the instant project also, many group meetings were organized (informally and formally) by IA & DPN in all villages where the interventions are happening. These meetings were attended by Village Panchayat members, senior/respected person of village, interested villagers/general public and representatives from DPN & IA. To ensure maximum participation, prior intimation in local language was given and such notices were also displayed at prominent places/panchayat office etc. During consultations/interaction processes with people of the localized areas, DPN field staffs explained benefit of the project, impacts of transmission line, payment of compensation for damaged of crops, trees, huts etc. as per The Indian Electricity Act, 2003 and The Indian Telegraph Act, 1885 and measures to avoid public utilities such as schools, hospital etc. People more or less welcomed the construction of the proposed project. Various issues inter alia raised by the people during public consultation and informal group meetings are as follows;

- To involve village headman during survey work/finalization of line corridor;
- To engage local people in various works associated with construction of line and if required proper training may be provided to engage them.
- To provide flexibility in disbursement of compensation;
- Direct payment of compensation to affected land owners and expeditious disbursement of compensation.

Also, during site visits, consultations were conducted with various stake holders belonging to community and affected people. Target group included contractor, contractor's labor, IA & DPN Staff and villagers. These consultations were carried out to capture the views of stakeholders about the project plan, design and layout of the project, environmental and social impacts, compensation process, benefits or drawback of the project etc.

It needs to be emphasized that public consultation was kept restricted due to the apprehensions of IA and contractors for security and other law & order related issues which were communicated and advised to field team at onset of field surveys itself and hence limited stakeholder consultations have been carried out. However, it was ensured that consultations representatively covered most stakeholders involved.

Major findings of the consultations are summarized below:

- People are well aware about the project, its various components and confirmed that IA & DPN informs about the project at every stage of execution.
- Considering that the state of electricity supply in the state is very weak, people welcomed the project as it will not only improve overall power

supply situation but will also improve reliability, quality, security and enhancement of power supply of the state.

- People confirmed that IA & DPN are taking every step possible to avoid/ minimize the environmental and social impacts along the route of transmission lines and at site of sub stations.
- People confirmed that community reserves, sacred groves and community conserved areas are completely avoided while finalizing the route of lines.
- People also confirmed that their common property resources such as cemetery, school, community hall, habitation areas etc. have been completely avoided while finalizing the route of lines.
- People informed that staff of IA/ contractor are easily approachable and are very open to address their grievances. As a result, no written grievance has been received till date.
- People are very much happy with the rate of compensation being given to them and they are being involved in the process of deciding the rate of compensation.
- People confirmed that there is no disturbance of any sort to their life/ livelihood due to the construction or various other activities being carried out under the project.
- No cases of conflict between migrant and local population has been reported till date.
- Execution of project work provides opportunities to local contractors to get involved in construction, fabrication, transportation etc. activities.
- Most of the sub-contracts are awarded/ being awarded to local peoples.
- Contractor prefer and engage local peoples for skilled and unskilled works
- Local villagers rented out their buildings to contractor and IA for temporary offices and staff quarters in local that helps in income generation
- Wherever possible contractor and IA purchase daily need requirements for local vendors and shopkeepers that helps in economic upliftment of the area
- The contractor labor informed that they have been provided with PPEs such as boots and helmets.
- Mock drills such as fire safety, first aid etc. are conducted periodically to enhance the preparedness level. Safety induction & awareness programme including HIV/AID are also conducted. Safety film for transmission project in local language is shown for better awareness.

- Migrant labors confirmed that they have been provided with camps and all basic facilities such as food, fuel, proper drinking water etc. They also confirmed that they do not source fuel wood from the forest areas.
- First aid boxes and provisions for treatment in case of emergencies are arranged locally/ nearby towns.
- It was revealed that contractor and IA work with close coordination with village heads and community to avoid any misunderstanding during work

Details of public consultation meetings carried out during site visit and public consultation using different technique like Public Meeting, Small Group Meeting, informal Meeting undertaken by IA & DPN including minutes of meeting, list of participants and photographs are enclosed as **Annexure X**.

5.8 COMPLIANCE OF EMP

The IA has a continuous monitoring mechanism of the project w.r.t. compliance of the mandatory requirements as stipulated in the IEAR. As many provisions of EMP related to construction contractor, EMP has been made integral part of contract document for its proper implementation by contractor/sub-contractor. Thus, the adherence to the clauses by the contractor is regularly monitored especially in respect of various implementation E & S measures including health and safety aspects. As part of the present study, mitigation measures as stipulated in the IEAR have been critically assessed/evaluated for compliance through physical inspection, verification of record/ documents/ drawing, interaction with project officials/contractor/ villagers/construction workers and PRA etc. Based on above, a detailed compliance status w.r.t. each identified impacts enlisted in EMP have been prepared and is presented in **Table 5.2**.

Table 5.2: Environment Monitoring Plan

Cl. No.	Project activity/ stage	Potential impact	Proposed mitigation measures	Compliance Status
Pre-Construction				
1	Location of overhead line towers/ poles/ underground distribution lines and alignment & design	Exposure to safety related risks	Setback of dwellings to overhead line route designed in accordance with permitted level of power frequency and the regulation of supervision at sites.	Complied with. Route alignment criterion is part of survey contract wherein all statutory Electrical clearances as stipulated under CEA's regulations, 2010 (Measures related to safety & electric supply) are considered/ ensured.
2	Equipment specifications and design parameters	Release of chemicals and gases in receptors (air, water, land)	PCBs not used in substation transformers or other project facilities or equipment.	Complied with. Part of technical specification of transformer. PCB is not used or non-detectable level (i.e. less than 2mg/kg) as per IEC 61619 or ASTM D4059
			Processes, equipment and systems not to use chlorofluorocarbons (CFCs), including halon, and their use, if any, in existing processes and systems should be phased out and to be disposed of in a manner consistent with the requirements of the Government	Complied with. CFC free equipment is part of tender specifications
3	Transmission/ Distribution line design	Exposure to electromagnetic interference	Line design to comply with the limits of electromagnetic interference from overhead power lines	Complied with. DPN follows the best international practices while designing its system to maintain acceptable prescribed Electro Magnetic Field (EMF) level. The ICNIRP guideline for acceptable EMF level for the general public (up to 24 hours a day) is a maximum exposure level of 1,000 mG or 100μT.
4	Substation location and design	Exposure to noise	Design of plant enclosures to comply with noise regulations.	Complied with. Transformers with maximum noise emitting level of 75 dB specified in tender specifications. Sound proof enclosures used for D.G sets
		Social inequities	Careful selection of site to avoid encroachment of socially, culturally and	Complied with. No encroachment of any socially sensitive

Cl. No.	Project activity/ stage	Potential impact	Proposed mitigation measures	Compliance Status
			archaeological sensitive areas (i. g. sacred groves, graveyard, religious worship place, monuments etc.)	areas due to proposed substations.
5	Location of overhead line towers/poles/ laying of underground distribution line & alignment and design	Impact on water bodies	Avoidance of such water bodies to the extent possible. Avoidance of placement of tower inside water bodies to the extent of possible	Complied with. Part of detailed alignment survey and design. No tower/pole located in water bodies.
		Social inequities	Careful route selection to avoid existing settlements and sensitive locations	Complied with. Part of detailed tower/pole alignment survey design.
			Minimise impact on agricultural land	Complied with. Though major section of proposed lines are routed through agricultural land in order to avoid impact on environmentally/ socially sensitive areas, efforts such as scheduling of construction lean/ post-harvest period, consultation with local authorities/ autonomous councils etc. are being made to minimize impacts on agricultural land/produce to the extent possible
			Careful selection of site and route alignment to avoid encroachment of socially, culturally and archaeological sensitive areas (i. e. sacred groves, graveyard, religious worship place, monuments etc.)	Complied with. All settlements & ecologically sensitive areas avoided.
6	Involuntary acquisition or permanent land acquisition for substation.	Social inequities	Compensation and R&R measures as per provision of RFCTLARRA, 2013	Since no involuntary acquisition of land is involved, there is no R&R issue.
7	Line through protected area/ precious ecological area	Loss of precious ecological values/ damage to precious species	Avoid siting into such areas by careful site and alignment selection (National Parks, Wildlife Sanctuary, Biosphere Reserves/ Biodiversity Hotspots)	Complied with. Part of detailed siting and alignment survey/design. All such areas are avoided
			Minimize the need by using RoW wherever possible	

Cl. No.	Project activity/ stage	Potential impact	Proposed mitigation measures	Compliance Status
8	Line through identified Elephant corridor / Migratory bird	Damage to the Wildlife/ Birds and also to line	Study of earmarked elephant corridors to avoid such corridors, Adequate ground clearance, Fault clearing by Circuit Breaker, Barbed wire wrapping on towers, reduced spans etc., if applicable	Not Applicable as there are no wildlife corridors
			Avoidance of established/ identified migration path (Birds & Bats). Provision of flight diverter/reflectors, Bird guard, elevated perches, insulating jumper loops, obstructive perch deterrents, raptor hoods etc., if applicable	Complied with. Bird guard/ anti perch devices are part of BoQ and also integral part of tower design.
9	Line through forestland	Deforestation and loss of biodiversity, edge effect	Avoid siting of line by careful site and alignment selection	Complied with. As part of detailed siting and alignment survey, forest areas have been completely avoided.
			Minimise the need by using existing towers, tall towers and RoW, wherever possible	Complied with. Tower extensions of 3-9 m have been provided to reduce tree felling, wherever needed
			Measures to avoid invasion of alien species	Invasion of alien species not anticipated
			Obtain statutory clearances from the Government	Not applicable as there is no involvement of forest land
			Consultation with autonomous councils wherever required	Complied with.
10	Lines through farmland	Loss of agricultural production/ change in cropping pattern	Use existing tower or footings wherever possible	Not applicable
			Avoid sitting new towers on farmland wherever feasible	Complied with. Part of detailed sitting and alignment survey. Though it is unavoidable but efforts have been made to minimized the impact/loss of production
11	Noise related	Nuisance to neighbouring properties	Substations sited and designed to ensure noise will not be a nuisance	Complied with. Part of detailed equipment design. Substations are appropriately sited and away from settlement area. Transformers with maximum noise emitting level of 75 dB

Cl. No.	Project activity/ stage	Potential impact	Proposed mitigation measures	Compliance Status
				and DG set with proper enclosures are part of equipment specification/ design criteria.
12	Interference with drainage patterns/Irrigation channels	Flooding hazards/ loss of agricultural production	Appropriate sitting of towers to avoid channel interference	Complied with. Part of detailed alignment survey, Interference with drainage patterns/ irrigation channels not anticipated
13	Escape of polluting materials	Environmental pollution	Transformers designed with oil spill containment systems, and purpose-built oil, lubricant and fuel storage system, complete with spill cleanup equipment.	Complied with. Part of detailed equipment design /drawings. Designed with oil spill containment systems having sump of capacity of 200% of oil volume of largest transformer
			Substations to include drainage and sewage disposal systems to avoid offsite land and water pollution.	Complied with. Proper drainage and sewage system are part of detailed substation layout and design /drawings based on site condition.
14	Equipment submerged under flood	Contamination of receptors	Substations constructed above the high flood level (HFL) by raising the foundation pad	Complied with. Part of detailed substation layout and design /drawings. All substations are being constructed above HFL.
15	Explosions /Fire	Hazards to life	Design of substations to include modern firefighting equipment	Complied with. Part of detailed substation layout and design /drawings. Compliance assured by site manager
			Provision of firefighting equipment to be located close to transformers	Complied with. Part of detailed substation layout and design /drawings. Compliance assured by site manager
Construction				
16	Equipment layout and installation	Noise and vibrations	Construction techniques and machinery selection seeking to minimize ground disturbance.	Complied with (Refer Section 5.3.5). Noise produced by concrete mixing equipment and excavators are temporary and confined to day time only. No ground disturbance observed.

Cl. No.	Project activity/ stage	Potential impact	Proposed mitigation measures	Compliance Status
17	Physical construction	Disturbed farming activity	Construction activities on cropping land timed to avoid disturbance of field crops (within one month of harvest wherever possible).	Complied with (Refer Section 5.2.5). Excavations not done during monsoon which is the cropping period. However, full compensation as per assessment of revenue authorities are being paid to land owner/ farmer by IA/DPN in case of inevitable damages. Till date no grievance has been received in this regard
18	Mechanized construction	Noise, vibration and operator safety, efficient operation	Construction equipment to be well maintained.	Complied with (Refer Section 5.3.5). Some noise is unavoidable during day time but no noise at night as no work is being undertaken at night. Noise levels' measurements are done regularly by IA & Construction contractor. Noise level measured during site visits to all active sites found to be within permissible limits (<75 dB).
		Noise, vibration, equipment wear and tear	Turning off plant not in use.	Complied with.
19	Construction of roads for accessibility	Increase in airborne dust particles	Existing roads and tracks used for construction and maintenance access to the line wherever possible.	Complied with. Existing roads and tracks are being used for construction and maintenance. However, approach road of 1.5 km is needed from existing road to New 132/33 kV Substation at Longleng. Water sprinkling will be done whenever required.
		Increased land requirement	New access ways restricted to a single carriageway width within the RoW.	Complied with.

Cl. No.	Project activity/ stage	Potential impact	Proposed mitigation measures	Compliance Status
		for temporary accessibility		Most of the tower locations are easily accessible through existing roads/ paths. All substations sites are located close to existing road. However, approach road of 1.5 km is needed from existing road to New 132/33 kV Substation at Longleng.
20	Construction activities	Safety of local villagers	Coordination with local communities for construction schedules, Barricading the construction area and spreading awareness among locals	Complied with (Refer Section 5.4.2). Excavated areas are barricaded and restriction to enter work site during construction strictly followed at most of the sites.
		Local traffic obstruction	Coordination with local authority/ requisite permission for smooth flow of traffic	Complied with. Most of the tower/pole locations are in farm/barren land. Hence, no traffic obstruction is witnessed. For substation location, smooth traffic flow is ensured by project authorities/contractor in close co-ordination with local authorities wherever necessary.
21	Temporary blockage of utilities	Overflows, reduced discharge	Measure in place to avoid dumping of fill materials in sensitive drainage area	Complied with (Refer Section 5.4.5). No dumping is observed. All overburden is managed optimally by reutilizing it as fill materials.
22	Site clearance	Vegetation	Marking of vegetation to be removed prior to clearance, and strict control on clearing activities to ensure minimal clearance.	Prior to undertaking clearance, marking has been undertaken to ensure minimal removal of vegetation during detailed survey. Minimum trees will be felled for construction of T&D network and new DMS and Transmission S/s. (Refer Section 4.4.1.4)

Cl. No.	Project activity/ stage	Potential impact	Proposed mitigation measures	Compliance Status
			No use of herbicides and pesticides	Not Applicable
23	Trimming /cutting of trees within RoW	Fire hazards	Trees allowed growing up to a height within the RoW by maintaining adequate clearance between the top of tree and the conductor as per the regulations.	The work is yet to start. To be complied during stringing work to maintain safe electrical clearance as per applicable norms (CEA's regulations, 2010 (Measures related to safety & electric supply)).
		Loss of vegetation and deforestation	Trees that can survive pruning to comply should be pruned instead of cleared.	
			Felled trees and other cleared or pruned vegetation to be disposed of as authorized by the statutory bodies.	Felled trees are handed over to land owner. IA/DPN have no role in storage or disposal of felled trees/wood
24	Wood/ vegetation harvesting	Loss of vegetation and deforestation	Construction workers prohibited from harvesting wood in the project area during their employment, (apart from locally employed staff continuing current legal activities)	Complied with. Couldn't verify as work was on hold and there was no labour camp. However, contractor assured that it is compiled with.
25	Surplus earthwork/soil	Runoff to cause water pollution, solid waste disposal	Soil excavated from tower footings/ substation foundation disposed of by placement along roadsides, or at nearby house blocks if requested by landowners	Complied with (Refer Section 5.4.1). Soil backfilled and excess spread out evenly and compacted. Excavated soil was properly stored and no dumping observed in visited sites/ location.
26	Substation construction	Loss of soil	Loss of soil is not a major issue as excavated soil will be mostly reused for filling. However, in case of requirement of excess soil the same will be met from existing quarry or through deep excavation of existing pond or other nearby barren land with agreement of local communities	Complied with (Refer Section 5.4.1 & 5.4.4). Excavated soil used optimally for backfilling and distribution within the substations' boundary is adequate. No additional requirements of soil observed for any substations.
		Water pollution	Construction activities involving significant ground disturbance (i.e. substation land forming) not undertaken during the monsoon season	Complied with No construction during monsoons. No seepage or water pollution observed

Cl. No.	Project activity/ stage	Potential impact	Proposed mitigation measures	Compliance Status
27	Site clearance	Vegetation	Tree clearances for easement establishment to only involve cutting trees off at ground level or pruning as appropriate, with tree stumps and roots left in place and ground cover left undisturbed	Complied with/to be complied
28	Substation foundation/ Tower erection disposal of surplus earthwork/fill	Waste disposal	Excessfill from substation/tower foundation excavation disposed of next to roads or around houses, in agreement with the local community or landowner	Complied/ to be complied (Refer Section 5.4.1 & 5.4.4) Excavated soil optimally used. Backfilling and spreading of excess soil within substation area assured by project authorities.
29	Storage of chemicals and materials	Contamination of receptors (land, water, air)	Fuel and other hazardous materials securely stored above high flood level.	Proper compliance to be ensured. To be stored in designated area inside the premise at most sites.
30	Construction schedules	Noise nuisance to neighbouring properties	Construction activities only undertaken during the day and local communities informed of the construction schedule.	Complied with Construction in day time only
31	Provision of facilities for construction workers	Contamination of receptors (land, water, air)	Construction workforce facilities to include proper sanitation, water supply and waste disposal facilities.	Complied with (Refer Section 5.4.6).
32	Influx of migratory workers	Conflict with local population to share local resources	Using local workers for appropriate asks	Complied with (Refer Section 5.4.6).
33	Lines through farmland	Loss of agricultural productivity	Use existing access roads wherever possible Ensure existing irrigation facilities are maintained in working condition Protect /preserve tops soil and reinstate after construction completed Repair /reinstate damaged bunds etc. after construction completed	Complied with. Observation already provided at Clause no 19 above. Repair/restoration done immediately wherever required. Till date no grievance has been received in this regard.

Cl. No.	Project activity/ stage	Potential impact	Proposed mitigation measures	Compliance Status
		Social inequities	Land owners/ Farmers compensated for any temporary loss of productive land as per existing regulation.	Compensation for land and damage to crop/tree etc. is being paid to land owner after assessment by revenue authorities. It is suggested that project authorities expedite process for early payment
34	Uncontrolled erosion/silt runoff	Soil loss, downstream siltation	Need for access tracks minimised, use of existing roads.	Complied with (Refer Section 5.4.1). Observation already provided at Clause no 19 above. Construction during monsoon avoided as far as possible.
			Limit site clearing to work areas	
			Regeneration of vegetation to stabilise works areas on completion (where applicable)	
			Avoidance of excavation in wet season	
			Water courses protected from siltation through use of bunds and sediment ponds	
35	Nuisance to nearby properties	Losses to neighbouring land uses/ values	Contract clauses specifying careful construction practices.	Complied with (Refer Section 5.4.2). Good construction practices with proper scheduling of construction activities observed in all active sites. No major deviation with respect to contract conditions by the contractor found/reported
			As much as possible existing access ways will be used	
			Productive land will be reinstated following completion of construction	
		Social inequities	Compensation will be paid for loss of production, if any.	Observation already provided at Clause no 34 above.
36	Flooding hazards due to construction impediments of natural drainage	Flooding and loss of soils, contamination of receptors (land, water)	Avoid natural drainage pattern/ facilities being disturbed/blocked/ diverted by ongoing construction activities	Observation already provided at Clause no 21 above.
37	Equipment submerged under flood	Contamination of receptors (land, water)	Equipment stored at secure place above the high flood level (HFL)	Complied with Substations are constructed above HFL
38	Inadequate siting of borrow areas (quarry areas)	Loss of land values	Existing borrow sites will be used to source aggregates, therefore, no need to develop new sources of aggregates	Complied with. No new site is being developed for aggregates.

Cl. No.	Project activity/ stage	Potential impact	Proposed mitigation measures	Compliance Status
39	Health and safety	Injury and sickness of workers and members of the public	Safety equipment's (PPEs) for construction workers	Not fully complied with (Refer Section 5.4.6) Safety equipment available but often not used by workers. Worker facilities/camp available but needs further improvement with respect to sanitation. Health & safety plan in place, however proper implementation needs to be ensured. No major accident/incident reported for any site till date. More training to be conducted to create awareness on use of PPEs /safety gear.
			Contract provisions specifying minimum requirements for construction camps	
			Contractor to prepare and implement a health and safety plan.	
			Contractor to arrange for health and safety training sessions	
40	Inadequate construction stage monitoring	Likely to maximise damages	Training of environmental monitoring personnel	More specific and periodic awareness/ training on IEAR, ESPPF etc. requirements for effective implementation/ monitoring of provisions of IEAR, ESPPF and contract conditions to achieve 100% compliance. It is suggested to deploy more environmental professionals for effective environmental monitoring and reporting system.
			Implementation of effective environmental monitoring and reporting system using checklist of all contractual environmental requirements	
			Appropriate contact clauses to ensure satisfactory implementation of contractual environmental mitigation measures.	
Operation and Maintenance				
41	Location of line towers/poles and overhead/ underground line alignment & design	Exposure to safety related risks	Setback of dwellings to overhead line route designed in accordance with permitted level of power frequency and the regulation of supervision at sites.	Not applicable at present. Pertain to Operation & Maintenance period only
42	Line through identified bird flyways, migratory path	Injury/ mortality to birds, bats etc. due to collision and electrocution	Avoidance of established/ identified migration path (Birds & Bats). Provision of flight diverter/reflectors, elevated perches, insulating jumper loops, obstructive perch deterrents, raptor hoods etc., if applicable	
43	Equipment submerged under flood	Contamination of receptors (land, water)	Equipment installed above the high flood level (HFL) by raising the foundation pad.	
44	Oil spillage	Contamination of land/nearby water	Substation transformers located within secure and impervious sump areas with a	

Cl. No.	Project activity/ stage	Potential impact	Proposed mitigation measures	Compliance Status
		bodies	storage capacity of at least 100% of the capacity of oil in transformers and associated reserve tanks.	
45	SF6 management	Emission of most potent GHG causing climate change	Reduction of SF6 emission through awareness, replacement of old seals, proper handling & storage by controlled inventory and use, enhance recovery and applying new technologies to reduce leakage	
46	Inadequate provision of staff/workers health and safety during operations	Injury and sickness of staff /workers	Careful design using appropriate technologies to minimise hazards	
			Safety awareness raising for staff.	
			Preparation of fire emergency action plan and training given to staff on implementing emergency action plan	
			Provide adequate sanitation and water supply facilities	
47	Electric Shock Hazards	Injury/ mortality to staff and public	Careful design using appropriate technologies to minimise hazards	
			Security fences around substations	
			Barriers to prevent climbing on/ dismantling of transmission	
			Appropriate warning signs on facilities	
			Electricity safety awareness raising in project areas	
48	Operations and maintenance staff skills less than acceptable	Unnecessary environmental losses of various types	Adequate training in O&M to all relevant staff of substations & transmission/ distribution line maintenance crews.	
			Preparation and training in the use of O&M manuals and standard operating practices	
49	Inadequate periodic environmental monitoring.	Diminished ecological and social values.	Staff to receive training in environmental monitoring of project operations and maintenance activities.	
50	Equipment specifications and design parameters	Release of chemicals and gases in receptors (air, water, land)	Processes, equipment and systems using cholofluorocarbons (CFCs), including halon, should be phased out and to be disposed of in a manner consistent with the	

Cl. No.	Project activity/ stage	Potential impact	Proposed mitigation measures	Compliance Status
			requirements of the Govt.	
51	Transmission/ distribution line maintenance	Exposure to electromagnet i.c. interference	Transmission/ distribution line design to comply with the limits of electromagnetic interference from overhead power lines	
52	Uncontrolled growth of vegetation	Fire hazard due to growth of tree/shrub /bamboo along RoW	Periodic pruning of vegetation to maintain requisite electrical clearance. No use of herbicides/ pesticides	
53	Noise related	Nuisance to neighbouring properties	Substations sited and designed to ensure noise will not be a nuisance.	

5.9 CONCLUSIONS

It is vivid from the above discussion that all transmission & distribution line routes and substations location have been selected judiciously by considering the technical, environmental, socio-economic aspects. Though some changes in line length & route alignment have been observed in transmission /distribution lines as compared to IEAR scope but as a result careful route selection IA could able to avoid ecologically & socially sensitive areas including forest, protected areas, PCR etc. completely in all the lines and substations being implemented under this project.

The provisions of IEAR & EMP are being implemented at ground level and strict compliance by construction contractors is ensured through regular monitoring by IA. So far, no major impacts apart from earlier identified impacts are anticipated due to such changes in scope. Besides, all other applicable laws/rules/regulations of the country & funding agencies are being complied with and till date no violation/ penalty with respect to contravention of any regulations has been reported. During assessment, it has also been observed that so far, the project has achieved zero fatality with no major non-compliance of EMP/Contract provisions as stipulated in IEAR, which is an indicative of the strict vigil of the IA.

It has also emerged from the survey & PRA exercise that the PAPs were appreciative of the project and hoped that the power scenario would improve after commissioning of the project. Local people also benefited through project related employment that was being generated. However, following suggestions may be considered to further improve the safeguard measures and also enhance the environmental sustainability of project.

- During the construction phase, the implementing agency needs to ensure strict compliance of the contract provisions/EMP by Contractor especially in respect of workers health and safety.
- Along with labours, supervisors, engineers and Staff of Implementing Agency (IA) should also need to follow the health and safety precautions.
- Need of regular induction and training program for labours and engineers at all sites.
- Training for PMU staff regarding monitoring and implantation of EMP as proposed in IEAR. It is suggested to deploy more environmental professionals for effective environmental monitoring and reporting system.
- Lack of coordination between IA officers and contractors regarding implementation of Health and Safety Plan.

- Records of labour registration, health checkup of labours and other working staff need to be maintained at all sites and strictly monitoring to avoid engagement of child labour.
- Training and awareness regarding cleanliness and solid waste disposal to maintain the hygiene in the labour camps and construction sites.
- Demarcation and protection for sites where work has been on hold due to various reasons to avoid accidents and runoff of excavated soil from construction sites
- Project staff of the implementing agency should be well versed with the contents of the IEAR so as to ensure proper compliance by the contractors.

Overall, the commissioning of the project will augment the power distribution and availability in the region which will further catalyze economic activity and development of the area/region.

Chapter 6 MONITORING AND ORGANIZATION SUPPORT STRUCTURE

For smooth implementation of this project, following administrative and functional set up have been institutionalized for project implementation, review and monitoring etc.

6.1 ADMINISTRATIVE ARRANGEMENT FOR PROJECT IMPLEMENTATION

Central Project Implementation Unit (CPIU) - A body responsible for coordinating the preparation and implementation of the project housed within the IA's offices at Guwahati. The "Project-In-Charge" of IA & Head of each of the SPCU shall be a member of CPIU.

State Project Coordination Unit (SPCU) – A body formed by the State Utility and responsible for coordinating with IA in preparing and implementing the project at the State level. It consists of experts across different areas from the Utility headed by an officer of the rank not below Chief Engineer, from the Utility.

Project Implementation Unit (PIU) – A body formed by the IA, including members of Utility on deputation, and responsible for implementing the Project across the State, with its personnel being distributed over the work site/s & operating in close association with the SPCU/ CPIU. PIU reports to the State level "Project Manager" nominated by the Project-in-Charge of IA. The IA has a Core team stationed at the CPIU on a permanent basis, and other IA officers (with required skills) make visits as and when required by this core team. This team represents IA is responsible for all coordination with SPCU, PIU, within IA and MoP, GoI. CPIU also assists MoP, GoI in monitoring project progress and coordination with The Bank.

6.2 REVIEW OF PROJECT IMPLEMENTATION PROGRESS

To enable timely implementation of the project/subprojects, following committee has been set up to review the progress;

A. **Joint Co-ordination Committee (JCC):** IA and SPCU nominate their representatives in a body called JCC to review the project. IA specifies quarterly milestones or targets, which are reviewed by JCC through a formal monthly review meeting. This meeting forum is called as Joint Co-ordination Committee Meeting (JCCM). The IA convenes & keeps record of every meeting. MoP, GoI and The Bank join in as and when needed.

B. High Power Committee (HPC): The Utility in consultation with its State Government has constituted a High Power Committee (HPC) consisting of high level officials from the Utility, State/ District Administration, Law enforcement agencies, Forest Department, etc. so that various permission/ approvals/ consents/ clearances etc. are processed expeditiously so as to reach the benefits of the Project to the end consumers. HPC meets on bimonthly basis or earlier, as per requirement. This forum is called as High Power Committee Meeting (HPCM) and the SPCU keeps records of every meeting. Minutes of the meeting will be shared with all concerned and if required, with GoI and The Bank.

C. Contractor's Review Meeting (CRM): Periodic Review Meeting is held by officials of PIU with Contractors at field offices, State Head Quarters (PIU location) and if required with core team of IA at Guwahati. These meetings are called "Contractor's Review Meeting" (CRM). PIU shall keep a record of all CRMs, which shall be shared with all concerned and if required, with GoI and The Bank.

D. Review meetings are held among MoP, GoI, The Bank, State Government, Utility and IA, at four (4) months interval or earlier if needed, primarily to maintain oversight at the top level, and also to debottleneck issues that require intervention at GoI/ State Government level. Minutes of the meeting shall be prepared by IA and shared with all concerned.

6.3 E&S MONITORING

The arrangement for monitoring and reviewing of project from the perspective of environment and social management forms part of overall arrangements for project management and implementation environment. Environmental monitoring is a continuous process throughout the Project life cycle starting from site selection to construction and maintenance stage. As IA, POWERGRID endeavors to implement the project in close coordination with the respective state power utilities and departments. POWERGRID has been implementing the project based on the Implementation/Participation agreements that were signed separately between POWERGRID and the Power utilities.

The IA has appointed dedicated Environment Officer in each state including Nagaland to oversee the E&S management. Besides, DPN also has a separate cell at the Circle office level namely Environment and Social Management Unit (ESMU) headed by Chief Engineer (Power) for proper implementation and

monitoring of environmental & social management measures. Apart from day to day E&S monitoring other major responsibilities are;

- Coordinating environmental and social commitments and initiatives with various multilateral agencies, MoEF&CC and Govt. of Nagaland.
- Coordination of all environmental activities related to a project from conceptualization to operation and maintenance stage.
- Advising site offices to follow-up with the state forest offices and other state departments for expediting forest clearances and other E&S issues of various projects.
- Providing a focal point for interaction with the MoEF&CC for expediting forest clearances
- Training of Circle and Site officials on E&S issues arising out of Transmission/Distribution projects and their management plan.
- Training of other departments to familiarize them with the ESPP document.

Additionally, Field In-Charge reviews the progress on daily basis and periodic review by higher management including review by Heads of SPCU and CPIU undertaken wherein apart from construction issues the environmental aspects of the projects are discussed and remedial measures taken wherever required. Besides, Periodic Contractor's Review Meeting (CRM) are being held by officials of PIU with Contractors at field offices, State Head Quarters (PIU location) and with CPIU at Guwahati for better co-ordination and resolution any pending issues. The World Bank mission team also visits various sites every six months to review the progress status including ground level implementation of safeguard measures. Any observation/agreed action plan suggested by the Bank is religiously complied in time bound manner. Additionally, review meeting among MoP, GoI, The Bank, State Governments., Utility and IA being held periodically to maintain oversight at the top level and also to debottleneck issues that require intervention at GoI/ State Government level.

The Capacity building and Institutional Strengthening program of the IA is held intermittently to enhance the skills of the project officials. Besides, separate E&S training are also organized for Official of State Utility under Capacity Building & Institutional Strengthening (CBIS) programme. Further, State utility meetings between IA and DPN are held on a monthly/ bimonthly basis to assess the work progress and difficulties encountered in respect of land acquisition, RoW and compensation if any.

The IA has a continuous monitoring mechanism of the project w.r.t. compliance of the mitigation measures as stipulated in the IEAR. Thus, the

adherences to the clauses by the contractors are regularly monitored especially in respect of various implementations of E&S measures including health and safety aspects. Due to such strong institutional support structure coupled with monitoring mechanism in place, no major non-compliance was observed/reported during the implementation of projects till date. The project has so far had zero fatality which is indicative of the strict vigil of the IA. During the present study, it was observed that mitigation measures as suggested in IEAR are mostly complied with even though some gaps were found with respect to proper documentation and condition of labour camp at one of the DMS sub-station.

6.4 GRIEVANCE REDRESSAL MECHANISM (GRM)

Grievance Redress Mechanism (GRM) is an integral and important mechanism for addressing/resolving the concern and grievances in a transparent and swift manner. In accordance with the provision in ESPPF, Grievance Redress Committees (GRC) have to be constituted in Nagaland both at the project/site level and at Corporate/HQ. This GRC is aimed to provide a trusted way to voice and resolve environment & social concerns of the project, and to address the concerns of the affected person/community in a time bound manner without impacting project implementation. The flow chart showing Grievance Redressal Mechanism is presented below.

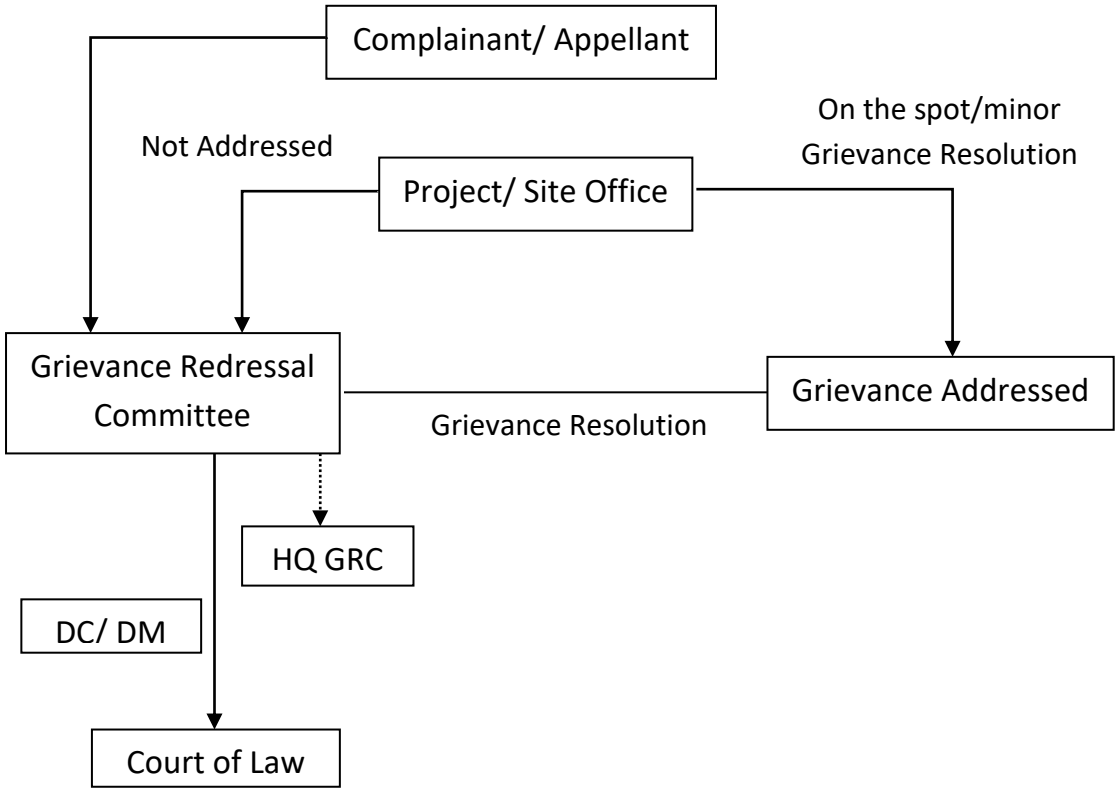

The above referred GRCs are meant to act as supplement/ complement and in no way substitute the legal systems, especially embedded within RFCTLARR Act 2013, The Electricity Act, 2003, and Right to Information Act.

However, till date, Corporate/HQ level GRC have not been constituted by SPCU. Similarly, out of the required 7 site level GRCs in the sub-project districts only 2 site level GRCs have been constituted by SPCU. Moreover, these 2-site level GRC don't have representatives from local administration, village panchayat, affected persons representatives, reputed persons from the society etc. PIU vide its Letter No. NERPSIP/KOH/5000/08/2018-18/1316 dated 22/03/2019 has requested SPCU for formation of all the GRCs with required members. Letter regarding constitution of site level GRC is given as **Figure 6.1**.

Figure 6.1: Constitution of Site Level GRC, NERPSIP, Nagaland

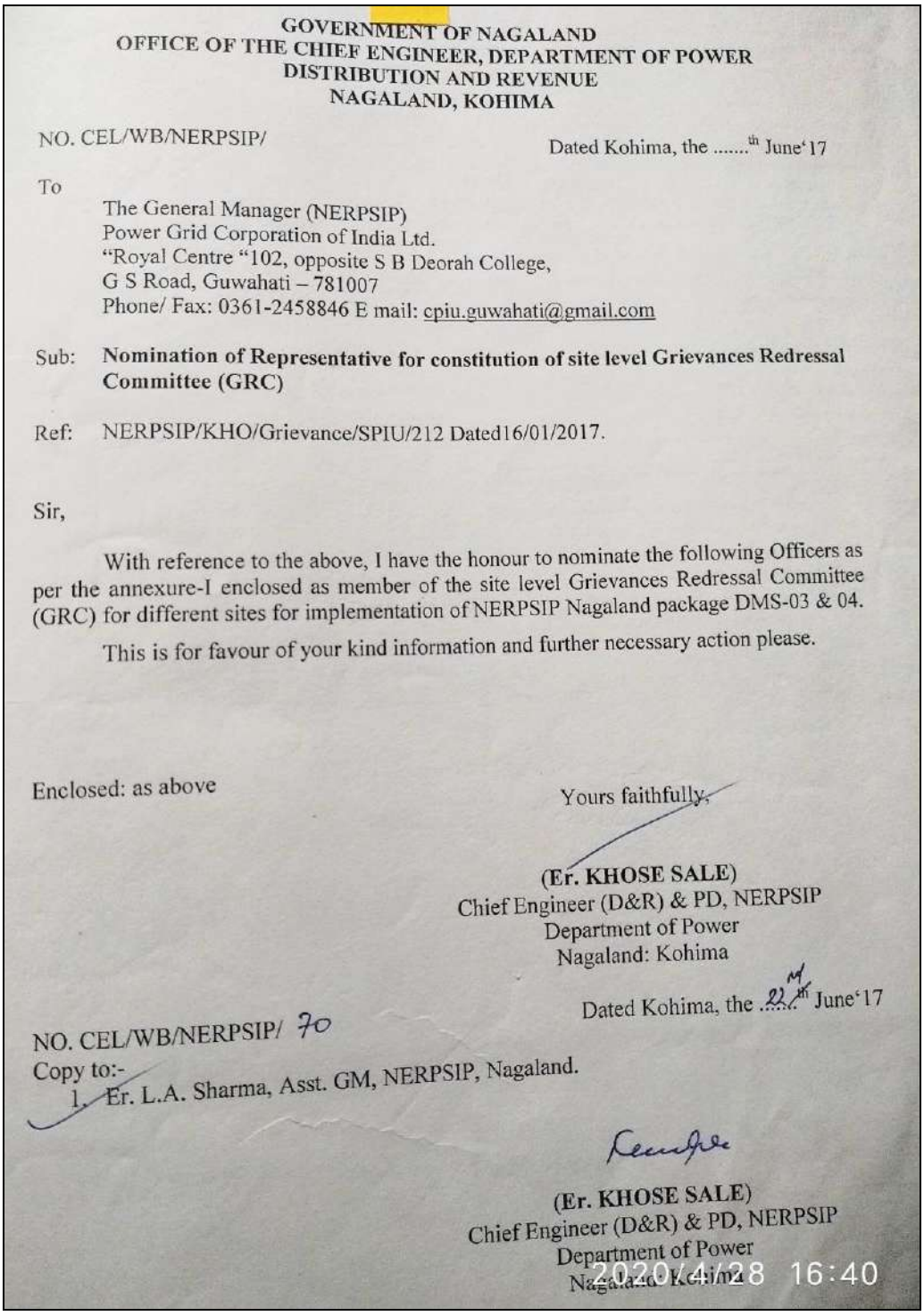

GOVERNMENT OF NAGALAND
OFFICE OF THE CHIEF ENGINEER, DEPARTMENT OF POWER
DISTRIBUTION AND REVENUE
NAGALAND, KOHIMA

NO. CEL/WB/NERPSIP/ Dated Kohima, the .....th June'17

To
The General Manager (NERPSIP)
Power Grid Corporation of India Ltd.
"Royal Centre "102, opposite S B Deorah College,
G S Road, Guwahati – 781007
Phone/ Fax: 0361-2458846 E mail: cpiu.guwahati@gmail.com

Sub: **Nomination of Representative for constitution of site level Grievances Redressal Committee (GRC)**

Ref: NERPSIP/KHO/Grievance/SPIU/212 Dated16/01/2017.

Sir,

With reference to the above, I have the honour to nominate the following Officers as per the annexure-I enclosed as member of the site level Grievances Redressal Committee (GRC) for different sites for implementation of NERPSIP Nagaland package DMS-03 & 04.

This is for favour of your kind information and further necessary action please.

Enclosed: as above

Yours faithfully,

(Er. KHOSE SALE)
Chief Engineer (D&R) & PD, NERPSIP
Department of Power
Nagaland: Kohima

Dated Kohima, the 22nd June'17

NO. CEL/WB/NERPSIP/ 70
Copy to:-
1. Er. L.A. Sharma, Asst. GM, NERPSIP, Nagaland.

(Er. KHOSE SALE)
Chief Engineer (D&R) & PD, NERPSIP
Department of Power
Nagaland: Kohima

2020/4/28 16:40

List of official nominated for site level Grievances Redressal Committee(GRC), NERPSIP, Nagaland

Package Name	Package Description	Member from DoP, Nagaland for site level GRC	Nominated Members from POWERGRID for site level GRC
NAG-DMS-03	New 33/11 KV Sub stations		Sh. L.A.Sharma , Asst .GM & Sh. P.K Sutradhar, Ch. Mgr.
	33/11 KV Sechu Zubza New S/s. – 2X 5 MVA	EE (E) Kohima, DoP, Nagaland	
	33/11 KV Chiephobozou New S/s.- 2X2.5 MVA	EE (E) Kohima, DoP, Nagaland	
	33/11 KV Pfutsero New S/s. – 2X5 MVA	EE (E) Phek, DoP, Nagaland	
	Bay Extensions , Capacity Augmentation at existing 33/11 KV sub - stations		
	At ITI Kohima S/s. – Replacement of existing 2X5 MVA Transformers by 2X10 MVA Transformers.	EE (E) Kohima, DoP, Nagaland	
	At Botsa S/s – 1X5 MVA		
	At Chakabama s/s – 1X5 MVA.		
	33 KV DMS Lines		
	33 KV line at Chiephobozou new S/s from 220/132/33 Kv New Kohima S/s of DoP.-1 Km.	EE (E) Kohima, DoP, Nagaland	
	33 KV line at Pfutsero New S/s from 132/33 KV Pfutsero New S/s (Prop.) –4 Km.	EE (E) Phek, DoP, Nagaland	
NAG-DMS-04	New 33/11 KV Sub stations		Sh. L.A.Sharma , Asst .GM & Sh. D. Chakravarty, Ch. Mgr.
	33/11 KV Padampukhri New S/s. – 2 X 10 MVA	EE (E), Dimapur, DoP, Nagaland	
	33/11 KV Tizit New S/s. – 2X5 MVA	EE (E), Mon, DoP, Nagaland	
	Bay Extensions , Capacity Augmentation at existing 33/11 KV sub - stations		
	At 132/66/33 KV Nagarjan Sub station	EE (E), Dimapur, DoP, Nagaland	
	At Industrial Estate S/s – 1X10 MVA		
	At Referral Hospital S/s – 1X10 MVA		
	33 KV DMS Lines		
	33 Kv line at Padampukhri new S/s from 132/66/33 KV Existing S/s at Nagarjan. – 10 Km.		

(Er. KHOSE SALE)
Chief Engineer (D&R) & PD, NERPSIP
Department of Power
Nagaland: Kohima

Apart from above, grievance redressal is in built in crop/tree/tower footing compensation process where affected persons are given a chance to place their grievances after issuance of notice by revenue officials on the basis of assessment of actual damages. Grievances received towards compensation are generally addressed in open forum and in the presence of many witnesses. Process of spot verification and random checking by the district collector/ its authorized representative also provides forum for raising the grievance towards any irregularity/complain. Moreover, DPN & POWERGRID officials also address to the complaints of affected farmers and the same are forwarded to revenue official for doing the needful, if required.

It may also be noted that concerns of public are addressed regularly through public consultation process which started from project planning to construction and will be continued in operation and maintenance also. Besides, many concerns/grievances from affected persons/public have been received by Site Offices which are also regularly tracked for early resolution. However, it has been observed that most of them were minor in nature and

were resolved instantly and amicably by Site Officials after discussion & deliberation with affected person/ in consultation of revenue/district officials.

6.4.1 Grievances Received & Resolved

Till date only verbal grievances have been received at site during project execution. Details of grievances/ complaints received up to Jan., 2020 are given in **Table 6.1**.

Table 6.1: Details of Grievances/ Complaints

S. No.	Name of the Subproject /State	Location	Name of Complainants	Date of Complaints	Main Issue of Complaints	Status of Complaint
A.	**Court Cases**					
No Court Case has been registered so far against any subprojects under NERPSIP						
B.	**Written Complaints**					
No written complaint has been received so far						
C.	**Verbal Complaints**					
1	New 33/11 kV S/s at Longleng	Longleng	Land owner	03.12.2018	Demanding work (Subcontract)	Discussed with contractor agency & provided dismantling work of Old Godown
2	132/33 kV Longleng S/S	Longleng	Pongo village Council	20.03.2019	Jungle Cutting work	Resolved through discussion (Contract agency gave the jungle cutting work to village council)

ANNEXURE I

List of Angiosperm

List of Angiosperms

S. No.	Family	Name of species	Habit	IUCN Red list Ver. 2020.1
1	Acanthaceae	*Justicia mollissima*	H	NA
2	Acanthaceae	*Phlogacanthus tubiflorus*	S	NA
3	Acanthaceae	*Strobilanthes coloratus*	S	NA
4	Acanthaceae	*Strobilanthes rhombifolia*	H	NA
5	Achariaceae	*Gynocardia odorata*	T	NA
6	Altingiaceae	*Altingia excelsa*	T	NA
7	Amaranthaceae	*Achyranthes aspera*	H	NA
8	Amaranthaceae	*Amaranthus spinosus*	H	NA
9	Amaranthaceae	*Amaranthus viridis*	H	NA
10	Amaranthaceae	*Chenopodium album*	H	NA
11	Anacardiaceae	*Mangifera indica*	T	DD
12	Anacradiaceae	*Mangifera sylvatica*	T	LC
13	Anacradiaceae	*Rhus chinensis*	T	LC
14	Apiaceae	*Centella asiatica*	H	LC
15	Apiaceae	*Eryngium foetidum*	H	NA
16	Araceae	*Alocasia fallax*	H	NA
17	Araceae	*Alocasia macrorrhizos*	H	NA
18	Araceae	*Ariopsis peltata*	H	NA
19	Araceae	*Arisaema concinnum*	H	NA
20	Araceae	*Colocasia forniculata*	H	NA
21	Araliaceae	*Aralia leschenaultii*	S	NA
22	Araliaceae	*Trevesia palmata*	S	NA
23	Arecaceae	*Calamus erectus*	S	NA
24	Arecaceae	*Calamus floribundus*	S	NA
25	Arecaceae	*Caryota urens*	T	LC
26	Arecaceae	*Trachycarpus martianus*	T	NA
27	Asparagaceae	*Asparagus racemosus*	H	NA
28	Asteraceae	*Ageratum conyzoides*	H	NA
29	Asteraceae	*Artemisia nilagirica*	H	NA
30	Asteraceae	*Bidens pilosa*	H	NA
31	Asteraceae	*Chromolaena odoratum*	S	NA
32	Asteraceae	*Mikania cordata*	H	NA
33	Asteraceae	*Spilanthes acmella*	H	NA
34	Balsaminaceae	*Impatiens brachycentra*	H	NA
35	Begoniaceae	*Begonia nepalensis*	H	NA
36	Betulaceae	*Alnus nepalensis*	T	LC
37	Bignoniaceae	*Oroxylum indicum*	T	NA
38	Burseraceae	*Canarium strictum*	T	NA
39	Burseraceae	*Garuga pinnata*	T	NA
40	Calophyllaceae	*Mesua ferrea*	T	NA
41	Caryophyllaceae	*Drymaria cordata*	H	NA

S. No.	Family	Name of species	Habit	IUCN Red list Ver. 2020.1
42	Combretaceae	*Terminalia myriocarpa*	T	NA
43	Commelinaceae	*Commelina benghalensis*	H	LC
44	Costaceae	*Cheilocostus speciosus*	S	NA
45	Cucurbitaceae	*Solena heterophylla*	H	NA
46	Cyperaceae	*Cyperus iria*	H	LC
47	Cyperaceae	*Cyperus rotundus*	H	LC
48	Dilleniaceae	*Dillenia indica*	T	NA
49	Dioscoreaceae	*Dioscorea bulbifera*	H	NA
50	Dipterocarpaceae	*Dipterocarpus gracilis*	T	VU
51	Dipterocarpaceae	*Shorea assamica*	T	NA
52	Euphorbiaceae	*Balakata baccatum*	T	NA
53	Euphorbiaceae	*Euphorbia hirta*	H	NA
54	Euphorbiaceae	*Macaranga denticulata*	T	NA
55	Euphorbiaceae	*Ricinus communis*	S	NA
56	Fabaceae	*Acacia pennata*	S	LC
57	Fabaceae	*Acrocarpus fraxinifolius*	T	NA
58	Fabaceae	*Albizia chinensis*	T	NA
59	Fabaceae	*Albizia procera*	T	NA
60	Fabaceae	*Bauhinia purpurea*	T	LC
61	Fabaceae	*Bauhinia variegata*	T	LC
62	Fabaceae	*Crotalaria pallida*	H	NA
63	Fabaceae	*Dalbergia pinnata*	T	NA
64	Fabaceae	*Erythrina variegata*	T	LC
65	Fabaceae	*Mimosa pudica*	H	LC
66	Fagaceae	*Castanopsis indica*	T	NA
67	Iteaceae	*Itea macrophylla*	T	NA
68	Juglandaceae	*Engelhardtia spicata*	T	LC
69	Lamiaceae	*Callicarpa arborea*	T	NA
70	Lamiaceae	*Gmelina arborea*	T	NA
71	Lauraceae	*Actinodaphne obovata*	T	NA
72	Lauraceae	*Cinnamomum glaucescens* (Syn. *Cinnamomum cecidodaphne*)	T	NA
73	Lauraceae	*Litsea salicifolia*	T	NA
74	Lauraceae	*Phoebe cooperiana*	T	NA
75	Lauraceae	*Phoebe paniculata*	T	NA
76	Lythraceae	*Duabanga grandiflora*	T	NA
77	Lythraceae	*Lagerstroemia parviflora*	T	NA
78	Magnoliaceae	*Magnolia champaca* (Syn. *Michelia champaca*)	T	LC
79	Malvaceae	*Bombax ceiba*	T	NA
80	Malvaceae	*Pterospermum acerifolium*	T	NA
81	Malvaceae	*Sida rhombifolia*	H	NA
82	Malvaceae	*Urena lobata*	H	NA
83	Melastomataceae	*Oxyspora paniculata*	S	NA
84	Melastomataceae	*Melastoma malabathricum*	S	NA
85	Meliaceae	*Chukrasia tabularis*	T	LC

S. No.	Family	Name of species	Habit	IUCN Red list Ver. 2020.1
86	Meliaceae	*Toona hexandra*	T	NA
87	Moraceae	*Artocarpus chama* (Syn. *Artocarpus chaplasha*)	T	NA
88	Moraceae	*Artocarpus heterophyllus*	T	NA
89	Moraceae	*Ficus auriculata*	T	NA
90	Moraceae	*Ficus roxburghii*	T	NA
91	Moraceae	*Ficus semicordata*	T	NA
92	Moraceae	*Morus macroura* (Syn. *Morus laevigata*)	T	NA
93	Musaceae	*Musa acuminata*	S	LC
94	Musaceae	*Musa balbisiana*	S	NA
95	Myrtaceae	*Syzygium tetragonum*	T	NA
96	Oleaceae	*Jasminum amplexicaule*	S	NA
97	Orchidaceae	*Bulbophyllum dyerianum*	H	NA
98	Orchidaceae	*Bulbophyllum reptans*	H	NA
99	Orchidaceae	*Ceratostylis teres*	H	NA
100	Orchidaceae	*Cleisostoma striatum*	H	NA
101	Orchidaceae	*Coelogyne griffithii*	H	NA
102	Orchidaceae	*Dendrobium hookerianum*	H	NA
103	Orchidaceae	*Eria amica*	H	NA
104	Orchidaceae	*Eulophia nuda*	H	NA
105	Orchidaceae	*Luisia teretifolia*	H	NA
106	Oxalidaceae	*Oxalis corniculata*	H	NA
107	Pandanaceae	*Pandanus odorifer*	T	LC
108	Phyllanthaceae	*Bischofia javanica*	T	NA
109	Phyllanthaceae	*Phyllanthus emblica*	T	NA
110	Piperaceae	*Piper betle*	H	NA
111	Poaceae	*Arundinaria callosa*	S	NA
112	Poaceae	*Arundinaria hirsuta*	S	NA
113	Poaceae	*Bambusa balcooa*	S	NA
114	Poaceae	*Bambusa khasiana*	S	NA
115	Poaceae	*Bambusa nana*	S	NA
116	Poaceae	*Bambusa pallida*	S	NA
117	Poaceae	*Bambusa tulda*	S	NA
118	Poaceae	*Cynodon dactylon*	H	NA
119	Poaceae	*Dendrocalamus giganteus*	S	LC
120	Poaceae	*Dendrocalamus hamiltonii*	S	NA
121	Poaceae	*Dendrocalamus strictus*	S	NA
122	Poaceae	*Imperata cylindrica*	H	NA
123	Poaceae	*Phragmites karka*	H	LC
124	Poaceae	*Poa annua*	H	LC
125	Poaceae	*Pogonatherum rufobarbatum*	H	NA
126	Poaceae	*Saccharum spontaneum*	S	LC
127	Poaceae	*Schizostachyum polymorphum*	S	NA
128	Poaceae	*Thysanolaena maxima*	S	NA
129	Polygonaceae	*Fagopyrum esculentum*	H	NA
130	Polygonaceae	*Persicaria capitata*	H	NA

S. No.	Family	Name of species	Habit	IUCN Red list Ver. 2020.1
131	Polygonaceae	*Polygonum persicaria*	H	LC
132	Polygonaceae	*Polygonum pubescens*	H	LC
133	Rubiaceae	*Haldina cordifolia*	T	NA
134	Rutaceae	*Murraya paniculata*	S	NA
135	Rutaceae	*Zanthoxylum retusum*	S	NA
136	Sabiaceae	*Meliosma simplicifolia*	T	NA
137	Sapindaceae	*Sapindus rarak*	T	NA
138	Simaroubaceae	*Ailanthus integrifolia*	T	LC
139	Simaroubaceae	*Alangium chinense*	T	NA
140	Solanaceae	*Capsicum annuum*	H	NA
141	Solanaceae	*Datura metel*	S	NA
142	Solanaceae	*Physalis minima*	H	LC
143	Solanaceae	*Solanum indicum*	H	NA
144	Solanaceae	*Solanum nigrum*	H	NA
145	Theaceae	*Schima wallichii*	T	LC
146	Urticaceae	*Elatostema sessile*	H	NA
147	Urticaceae	*Lecanthus peduncularis*	H	NA
148	Urticaceae	*Pilea scripta*	H	NA
149	Urticaceae	*Pouzolzia glaberrima*	H	NA
150	Urticaceae	*Urtica dioica*	H	LC
151	Zingiberaceae	*Alpinia nigra*	H	NA
152	Zingiberaceae	*Curcuma aeruginosa*	H	NA
153	Zingiberaceae	*Curcuma angustifolia*	H	NA
154	Zingiberaceae	*Hedychium spicatum*	S	NA
155	Zingiberaceae	*Zingiber officinale*	H	NA

ANNEXURE II

Details of Tower Schedule of 132kV Lines

CLIENT:P.G.C.I.L

DETAILED SURVEY TOWER SCHEDULE

LINK:132KV S/C (On D/C Tower) Tuensang - Longleng T/L

SL NO	AP NO	TOWER NO	TYPE OF TOWER	CONNECT WITH BB	CONNECT WITH NT	REMARKS	ANGLE OF DEVIATION	LEG EXTENSION				CHIMNEY EXTENSION				SPAN IN (M)	SEC. LENG.	CUMLTV . LENGTH	R.L	C.P.D.	LEVEL DIFF.	SUM OF ADJ. SPAN	WIND SPAN	WEIGHT SPAN IN (HOT)			WEIGHT SPAN IN (			MAJOR CROSSING DETAIL	VILL NAME	GPS CO-ORDINATE WGS-84	
								A	B	C	D	A	B	C	D									LEFT	RIGHT	TOTAL	LEFT	RIGHT	TOTAL			EASTING	NORTHING
1			Gantry					0	0	0	0	0	0	0	0				1622.4			45.00	22.50		697.11	697.11		1124.15	1124.15		VILL-HELIPONG	94°47'59.69"	26°14'54.97"
2	1	1/0	DD	BB	0	X-Arm Strengthening Suggested	14°15'36"LT	9	6	6	6	0	0	0	0	45	45	45	1601.6	2	-16.74	123.00	61.50	-652.11	1048.27	396.16	-1079.15	1687.15	608.00	Hut, Boundary	VILL-HELIPONG	94°48'01.56"	26°14'54.69"
3	2	2/0	DD	BB		X-Arm Strengthening Suggested	55°49'20"LT	0	1.5	1.5	0	0	0	0	0	78	78	123	1582.2	0	-43.41	298.00	149.00	-970.27	101.84	-868.43	-1609.15	96.67	-1512.47	Vill Road	VILL-HELIPONG	94°48'04.19"	26°14'54.42"
4	3	3/0	DC	BB	0		25°35'24"LT	9	9	9	9	1.5	3	0	0	220	220	343	1556.2	2	0.99	399.00	199.50	118.16	115.33	233.49	123.33	131.69	255.01		VILL-HELIPONG	94°48'09.12"	26°15'00.12"
5	4	4/0	DD	BB	0	X-Arm Strengthening Suggested	34°23'30"RT	9	9	9	9	0	1.5	3	0	179	179	522	1553.2	1.5	-2.55	453.00	226.50	63.67	1173.72	1237.39	47.31	1829.99	1877.30	11KV	VILL-HELIPONG	94°48'10.47"	26°15'05.98"
6	5	5/0	DB	BB	0	X-Arm Strengthening Suggested	07°35'24"LT	3	6	6	3	0	0	0	0	274	274	796	1401.5	0.5	-156.64	467.00	233.50	-899.72	692.69	-207.03	-1555.99	1070.09	-485.90		VILL-HELIPONG	94°48'17.76"	26°15'11.89"
7	6	6/0	DD	BB		Used DD tower instead of DC due to Sum of Adj. Span Limit Crossed	28°41'42"LT	0	1.5	0	0	0	0	0	0	193	193	989	1342.6	2	-63.45	661.00	330.50	-499.69	642.96	143.27	-877.09	901.84	24.75		VILL-HELIPONG	94°48'22.31"	26°15'16.64"
8	7	7/0	DB	BB	0		02°25'47"RT	4.5	4.5	3	3	0	0	0	0	468	468	1457	1232.5	0.5	-105.54	772.00	386.00	-174.96	381.31	206.35	-433.84	526.46	92.62	Vill Road	VILL-HELIPONG	94°48'25.42"	26°15'31.54"
9	8	8/0	DC	BB	0	X-Arm Strengthening Suggested	25°19'16"RT	3	4.5	3	3	0	0	0	0	304	304	1761	1194.8	1	-38.44	474.00	237.00	-77.31	525.14	447.83	-222.46	803.76	581.29		VILL-HELIPONG	94°48'27.83"	26°15'41.09"
10	9	9/0	DB	BB		X-Arm Strengthening Suggested	13°19'43"RT	0	0	1.5	0	0	0	0	0	170	170	1931	1156.3	1	-41.26	670.00	335.00	-355.14	166.11	-189.03	-633.76	113.00	-520.75	Vill Road	VILL-HELIPONG	94°48'31.70"	26°15'45.41"
11	10	10/0	DB	BB	0		10°01'37"LT	9	9	9	9	0	0	3	1.5	500	500	2431	1172	2.5	23.13	651.00	325.50	333.89	181.67	515.56	387.00	248.87	635.87	Nala, NH-702B	VILL-TUENSANG	94°48'46.04"	26°15'55.40"
12	11	11/0	DB	BB	0	X-Arm Strengthening Suggested	09°38'32"LT	9	9	9	9	0	0	3	1.5	151	151	2582	1162.8	2	-8.84	575.00	287.50	-30.67	511.65	480.98	-97.87	701.33	603.46		VILL-TUENSANG	94°48'49.62"	26°15'59.23"
13	12	12/0	DB	BB	0		09°04'25"RT	6	6	9	7.5	0	0	0	0	424	424	3006	1095.6	2	-70.06	688.00	344.00	-87.65	338.56	250.91	-277.33	469.31	191.98	Vill Road, NH-702B	VILL-TUENSANG	94°48'57.65"	26°16'10.66"
14	13	13/0	DC	BB	0		20°10'18"LT	3	3	6	4.5	0	0	0	0	264	264	3270	1066.5	0	-30.07	434.00	217.00	-74.56	308.16	233.61	-205.31	449.43	244.12	Nala	VILL-TUENSANG	94°49'03.61"	26°16'17.12"
15	14	14/0	DB	BB	0		10°56'19"LT	6	6	6	6	0	0	0	0	170	170	3440	1043.8	1	-20.92	647.00	323.50	-138.16	231.92	93.76	-279.43	227.76	-51.67	Orange Garden	VILL-TUENSANG	94°49'06.17"	26°16'22.46"
16	15	15/0	DB	BB	0		05°20'48"RT	6	6	7.5	7.5	0	0	0	0	477	477	3917	1044.8	0.5	1.73	742.00	371.00	245.08	-56.79	188.29	249.24	-176.61	72.63	Vill Road	VILL-TUENSANG	94°49'08.74"	26°16'37.74"
17	16	16/0	DB	BB	0		10°00'50"RT	6	6	7.5	9	0	0	0	0	265	265	4182	1072.5	0.5	27.66	597.00	298.50	321.79	331.23	653.02	441.61	435.83	877.43	NH-702B	VILL-TUENSANG	94°49'11.17"	26°16'45.99"
18	17	17/0	DD	BB	0		54°12'48"RT	3	3	4.5	4.5	0	0	0	0	332	332	4514	1045.2	0.5	-30.25	572.00	286.00	0.77	387.71	388.48	-103.83	557.18	453.35		VILL-TUENSANG	94°49'16.44"	26°16'55.71"
19	18	18/0	DB	BB	0	X-Arm Strengthening Suggested	10°44'41"LT	6	6	7.5	6	0	0	0	0	240	240	4754	1007.3	1	-35.43	433.00	216.50	-147.71	587.08	439.36	-317.18	897.62	580.44	Vill Road, LT Line, NH-702B	VILL-TUENSANG	94°49'24.89"	26°16'57.13"
20	19	19/0	DB	BB	0	X-Arm Strengthening Suggested	08°33'36"LT	3	3	3	3	0	0	0	0	193	193	4947	959.07	2	-52.21	382.00	191.00	-394.08	629.04	234.97	-704.62	967.42	262.80		VILL-TUENSANG	94°49'31.42"	26°16'59.47"
21	20	20/0	DB	BB		X-Arm Strengthening Suggested	12°21'16"LT	0	1.5	1.5	1.5	0	0	0	0	189	189	5136	904.36	0	-55.71	416.00	208.00	-440.04	496.65	56.60	-778.42	739.18	-39.23	Vill Road	VILL-TUENSANG	94°49'36.84"	26°17'03.08"
22	21	21/0	DB	BB	0		09°18'37"LT	3	3	3	3	0	0	0	0	227	227	5363	855.4	2	-47.96	550.00	275.00	-269.65	137.53	-132.12	-512.18	122.35	-389.83		VILL-TUENSANG	94°49'42.43"	26°17'08.17"
23	22	22/0	DC	BB	0		17°52'42"RT	6	9	7.5	6	0	0	0	0	323	323	5686	857.17	2.5	4.27	619.00	309.50	185.47	221.03	406.50	200.65	267.26	467.91	Vill Road, 2 Times Nala, Tourist Spot	VILL-TUENSANG	94°49'48.08"	26°17'17.64"

SUBMITTED BY:
SHYAMA POWER(I) LTD.

CHECKED BY
P.G.C.I.L

के.के. मेधी, उप महाप्रबंधक
K.K. MEDHI, Deputy General Manager
पावरग्रिड, एन.ई.आर.पि.एस.आई.पि., लंडलेङ
POWERGRID, NERPSIP, LONGLENG

APPROVED BY:
P.G.C.I.L

CLIENT:P.G.C.I.L

DETAILED SURVEY TOWER SCHEDULE

LINK:132KV S/C (On D/C Tower) Tuensang - Longleng T/L

SL NO	AP NO	TOWER NO	TYPE OF TOWER	CONNECT WITH	CONNECT WITH	REMARKS	ANGLE OF DEVIATION	LEG EXTENSION				CHIMNEY EXTENSION				SPAN IN (M)	SEC. LENG.	CUMLTV . LENGTH	R.L	C.P.D.	LEVEL DIFF.	SUM OF ADJ.	WIND SPAN	WEIGHT SPAN IN (HOT)			WEIGHT SPAN IN (			MAJOR CROSSING DETAIL	VILL NAME	GPS CO-ORDINATE WGS-84	
								A	B	C	D	A	B	C	D									LEFT	RIGHT	TOTAL	LEFT	RIGHT	TOTAL			EASTING	NORTHING
23	22	22/0	DC	BB	0		17°52'42"RT	6	9	7.5	6	0	0	0	0				857.17	2.5		619.00	309.50	185.47	221.03	406.50	200.65	267.26	467.91		VILL-TUENSANG	94°49'48.08"	26°17'17.64"
24	23	23/0	DB	BB	0		10°03'55"LT	9	9	6	6	1.5	1.5	0	0	296	296	5982	842.75	0	-11.92	808.00	404.00	74.97	104.76	179.73	28.74	9.02	37.76	2 Times NH-702B, Nala	VILL-TAGHI	94°49'56.36"	26°17'23.77"
25	25	25/0	DC	BB	0	Used DC tower instead of DB due to Sum of Adj. Span Limit Crossed	11°40'48"RT	9	9	9	9	3	3	0	0	512	512	6494	885.45	3	42.70	772.00	386.00	407.24	289.72	696.97	502.98	390.83	893.81	2 Times NH-702B	VILL-TAGHI	94°50'08.17"	26°17'36.74"
26	26	26/0	DC	BB	0		19°49'31"RT	9	7.5	6	6	0	0	0	0	260	260	6754	864.05	1.5	-22.90	524.00	262.00	-29.72	-159.05	-188.77	-130.83	-343.29	-474.12	NH-702B, Nala	VILL-TAGHI	94°50'15.51"	26°17'41.81"
27	27	27/0	DB	BB	0	X-Arm Strengthening Suggested	04°14'02"RT	9	9	9	9	3	1.5	0	0	264	264	7018	903.92	2	42.37	438.00	219.00	423.05	112.33	535.37	607.29	128.36	735.64	NH-702B	VILL-TAGHI	94°50'24.52"	26°17'44.50"
28	28	28/0	DC	BB	0		17°07'08"LT	9	9	9	9	1.5	3	0	0	174	174	7192	901.98	2.5	-2.43	473.00	236.50	61.67	44.88	106.55	45.64	-21.35	24.29		VILL-TAGHI	94°50'30.72"	26°17'45.76"
29	29	29/0	DD	BB	0		39°35'14"LT	9	9	9	9	0	0	0	0	299	299	7491	920.24	3.5	17.25	440.00	220.00	254.12	58.80	312.92	320.35	51.39	371.74	2 Times NH-702B	VILL-TAGHI	94°50'40.11"	26°17'50.61"
30	30	30/0	DC	BB	0		22°19'50"RT	6	9	6	6	0	0	0	0	141	141	7632	923.15	2.5	0.91	548.00	274.00	82.20	210.14	292.34	89.61	214.34	303.95		VILL-TAGHI	94°50'41.79"	26°17'54.90"
31	31	31/0	DB	BB	0		11°35'52"RT	4.5	4.5	3	3	0	0	0	0	407	407	8039	923.16	1	-1.49	703.00	351.50	196.86	84.22	281.08	192.66	43.85	236.51	2 Times NH-702B	VILL-TAGHI	94°50'51.47"	26°18'04.77"
32	32	32/0	DC	BB	0		25°26'18"LT	6	4.5	3	4.5	0	0	0	0	296	296	8335	933.07	0.5	10.41	510.00	255.00	211.78	343.68	555.46	252.15	493.51	745.66		VILL-TUENSANG	94°51'00.08"	26°18'10.68"
33	33	33/0	DD	BB			32°09'28"RT	1.5	1.5	0	0	0	0	0	0	214	214	8549	909.14	1.5	-27.93	547.00	273.50	-129.68	56.28	-73.41	-279.51	-13.50	-293.01		VILL-TUENSANG	94°51'03.64"	26°18'16.64"
34	34	34/0	DD	BB	0		41°51'25"LT	4.5	6	3	3	0	0	0	0	333	333	8882	926.36	1.5	20.24	501.00	250.50	276.72	158.37	435.10	346.50	205.45	551.95	2 Times NH-702B	VILL-TUENSANG	94°51'14.13"	26°18'22.13"
35	35	35/0	DD	BB			32°40'18"LT	1.5	1.5	0	0	0	0	0	0	168	168	9050	922.49	1.5	-6.89	445.00	222.50	9.63	140.46	150.09	-37.45	141.71	104.25		VILL-TUENSANG	94°51'16.08"	26°18'27.28"
36	36	36/0	DB	BB	0		00°34'43"RT	6	7.5	6	6	0	0	0	0	277	277	9327	916.69	2	-0.30	648.00	324.00	136.54	63.93	200.47	135.29	-13.02	122.27		VILL-TUENSANG	94°51'13.49"	26°18'35.98"
37	37	37/0	DB	BB			11°04'56"RT	1.5	1.5	0	0	0	0	0	0	371	371	9698	946.06	0.5	24.87	765.00	382.50	307.07	310.69	617.75	384.02	382.65	766.67	2 Times NH-702B	VILL-TAGHI	94°51'10.19"	26°18'47.84"
38	39	39/0	DD	BB			42°22'20"RT	1.5	1.5	0	0	0	0	0	0	394	394	10092	922.36	1.5	-24.70	844.00	422.00	83.31	407.31	490.63	11.35	522.72	534.07	2 Times NH-702B	VILL-TAGHI	94°51'09.56"	26°19'00.56"
39	40	40/0	DC	BB			18°04'20"LT	0	0	0	0	0	0	0	0	450	450	10542	876.62	1	-45.24	752.00	376.00	42.69	-58.39	-15.70	-72.72	-190.94	-263.66	Nala	VILL-TAGHI	94°51'19.80"	26°19'11.67"
40	41	41/0	DB	BB	0		13°49'03"RT	7.5	6	6	6	0	0	0	0	302	302	10844	905.49	1	34.87	521.00	260.50	360.39	-192.58	167.81	492.94	-383.80	109.14		VILL-SANGCHEN	94°51'23.67"	26°19'20.98"
41	42	42/0	DB	BB	0	X-Arm Strengthening Suggested	05°47'01"LT	7.5	7.5	6	6	0	0	0	0	219	219	11063	941.97	1	36.48	552.00	276.00	411.58	565.57	977.15	602.80	818.19	1420.99	NH-702B	VILL-SANGCHEN	94°51'28.18"	26°19'26.89"
42	43	43/0	DC	BB			24°57'58"RT	0	1.5	0	0	0	0	0	0	333	333	11396	874.69	1	-73.28	601.00	300.50	-232.57	370.50	137.92	-485.19	520.20	35.01	NH-702B	VILL-SANGCHEN	94°51'33.95"	26°19'36.25"
43	44	44/0	DB	BB	0		10°29'21"LT	9	9	9	9	0	0	0	0	268	268	11664	832.24	2.5	-34.95	616.00	308.00	-102.90	174.10	71.61	-252.20	174.17	-78.03		VILL-SANGCHEN	94°51'41.70"	26°19'41.54"
44	45	45/0	DC	BB	0	X-Arm Strengthening Suggested	19°49'60"RT	4.5	6	3	3	0	0	0	0	348	348	12012	836.22	0.5	-0.02	648.00	324.00	173.90	427.82	601.72	173.83	603.69	777.52	Nala	VILL-SANGCHEN	94°51'50.43"	26°19'49.58"
45	46	46/0	DD	BB	0		40°23'59"LT	6	3	3	3	0	0	0	0	300	300	12312	780.76	1	-45.96	549.00	274.50	-127.82	123.04	-4.78	-303.69	122.12	-181.57	Vill Road	VILL-SANGCHEN	94°52'00.18"	26°19'54.05"
46	47	47/0	DC	BB			18°54'56"RT	0	0	0	0	0	0	0	0	249	249	12561	793.98	1	0.20	633.00	316.50	125.96	312.57	438.52	126.88	388.89	515.77		VILL-SANGCHEN	94°52'03.68"	26°20'01.39"
47	48	48/0	DB	BB			07°34'44"LT	0	0	0	0	0	0	0	0	384	384	12945	768.43	1	-25.53	755.00	377.50	71.43	-131.64	-60.20	-4.89	-332.39	-337.28	Nala	VILL-SANGCHEN	94°52'12.91"	26°20'10.85"

SUBMITTED BY:
SHYAMA POWER(I) LTD.

CHECKED BY:
P.G.C.I.L.

के.के. मेधी, उप महाप्रबंधक
K.K. MEDHI, Deputy General Manager
पावरग्रिड, एन.ई.आर.पि.एस.आई.पि., लंडलेड
POWERGRID, NERPSIP, LONGLENG

एल. ए. शर्मा / L. A. Sharma
महाप्रबंधक /
एन. ई. आर. पी. एस.
पावरग्रिड / POWERGRID
कोहिमा : नागालैंड / Kohima : Nagaland

APPROVED BY:
P.G.C.I.L

CLIENT:P.G.C.I.L

DETAILED SURVEY TOWER SCHEDULE

LINK:132KV S/C (On D/C Tower) Tuensang - Longleng T/L

SL NO	AP NO	TOWER NO	TYPE OF TOWER	CONNECT WITH	CONNECT WITH	REMARKS	ANGLE OF DEVIATION	LEG EXTENSION				CHIMNEY EXTENSION				SPAN IN (M)	SEC. LENG.	CUMLTV LENGTH	R.L	C.P.D.	LEVEL DIFF.	SUM OF ADJ.	WIND SPAN	WEIGHT SPAN IN (HOT)			WEIGHT SPAN IN (			MAJOR CROSSING DETAIL	VILL NAME	GPS CO-ORDINATE WGS-84	
								A	B	C	D	A	B	C	D									LEFT	RIGHT	TOTAL	LEFT	RIGHT	TOTAL			EASTING	NORTHING
47	48	48/0	DB	BB			07°34'44"LT	0	0	0	0	0	0	0	0				768.43	1		755.00	377.50	71.43	-131.64	-60.20	-4.89	-332.39	-337.28		VILL-SANGCHEN	94°52'12.91"	26°20'10.85"
48	49	49/0	DB	BB	0	X-Arm Strengthening Suggested	01°35'05"LT	7.5	6	6	6	0	0	0	0	371	371	13316	828.31	2	64.88	937.00	468.50	502.64	298.48	801.11	703.39	308.27	1011.66	Pond, NH-702B	VILL-SANGCHEN	94°52'20.27"	26°20'20.60"
49	50	50/0	DB	BB		X-Arm Strengthening Suggested	11°21'15"LT	1.5	0	0	1.5	0	0	0	0	566	566	13882	828.98	1.5	-4.83	796.00	398.00	267.52	-444.73	-177.21	257.73	-799.05	-541.32	Nala, NH-702B	VILL-SANGCHEN	94°52'31.15"	26°20'36.20"
50	51	51/0	DB	BB	0	X-Arm Strengthening Suggested	04°46'36"LT	3	3	3	3	0	0	0	0	230	230	14112	898.97	1.5	70.99	401.00	200.50	674.73	-268.29	406.45	1029.05	-492.24	536.81	NH-702B, Boundary	VILL-SANGCHEN	94°52'34.18"	26°20'43.30"
51	51A	51A	DB	BB		X-Arm Strengthening Suggested	05°09'24"RT	1.5	0	0	0	0	0	0	0	171	171	14283	832.83	1	33.36	511.00	255.50	439.29	-157.70	281.58	663.24	-365.15	298.09	Boundary	VILL-SANGCHEN	94°52'38.00"	26°20'48.64"
52	52	52/0	DB	BB	0	X-Arm Strengthening Suggested	05°06'25"RT	6	6	3	3	0	0	0	0	340	340	14623	990.27	0	61.44	493.00	246.50	497.70	-259.88	237.82	705.15	-472.82	232.33		VILL-SANGCHEN	94°52'40.30"	26°20'58.85"
53	53	53/0	DB	BB	0	X-Arm Strengthening Suggested	12°21'13"RT	6	4.5	3	3	0	0	0	0	153	153	14776	1019.2	0.5	28.38	296.00	148.00	412.88	171.68	584.57	625.82	235.10	860.92	Vill Road	VILL-SANGCHEN	94°52'42.91"	26°21'03.25"
54	54	54/0	DC	BB	0	X-Arm Strengthening Suggested	16°49'38"LT	9	9	9	9	0	3	0	0	143	143	14919	1007.8	3	-7.90	517.00	258.50	-28.68	452.09	423.40	-92.10	619.89	527.79	11KV	VILL-SANGCHEN	94°52'46.01"	26°21'07.02"
55	55	55/0	DC	BB	0		23°09'07"RT	3	3	3	3	0	0	0	0	374	374	15293	957.08	1	-54.67	590.00	295.00	-78.09	289.85	211.76	-245.89	404.97	159.07	2 Nos. Vill Road	VILL-SANGCHEN	94°52'50.90"	26°21'16.35"
56	56	56/0	DD	BB	0		35°58'06"LT	3	6	3	3	0	0	0	0	216	216	15509	935.42	1	-21.66	562.00	281.00	-73.85	33.53	-40.32	-188.97	-54.76	-243.72	NH-702B, Orange Garden	VILL-SANGCHEN	94°52'56.38"	26°21'23.28"
57	57	57/0	DC	BB			20°16'02"LT	1.5	1.5	0	0	0	0	0	0	346	346	15855	965.53	1.5	26.61	560.00	280.00	312.47	296.31	608.78	400.76	416.15	816.91	NH-702B, Orange Garden, Vill Road	VILL-SAOSHOU	94°52'58.04"	26°21'34.40"
58	58	58/0	DC	BB			19°16'14"RT	1.5	0	0	0	0	0	0	0	214	214	16069	943.19	1.5	-22.34	611.00	305.50	-82.31	305.02	222.71	-202.15	372.46	170.31	NH-702B, Orange Garden	VILL-SAOSHOU	94°52'56.48"	26°21'41.28"
59	59	59/0	DB	BB			00°24'40"RT	1.5	1.5	0	0	0	0	0	0	397	397	16466	919.37	1	-23.32	556.00	278.00	91.98	-119.18	-27.21	24.54	-244.95	-220.41	2 Times Vill Road, Orange Garden	VILL-SAOSHOU	94°52'58.22"	26°21'54.02"
60	60	60/0	DB	BB	0		12°25'08"LT	9	9	6	6	0	0	0	0	159	159	16625	929.79	0	17.42	627.00	313.50	278.18	204.86	483.04	403.95	186.41	590.37		VILL-SAOSHOU	94°52'58.84"	26°21'59.09"
61	61	61/0	DB	BB	0		04°38'31"LT	9	9	9	9	0	0	0	0	468	468	17093	936.81	2.5	7.52	824.00	412.00	263.14	333.32	596.46	281.59	431.63	713.22	NH-702B	VILL-SAOSHOU	94°52'57.88"	26°22'14.26"
62	62	62/0	DB	BB			10°42'44"RT	0	1.5	0	0	0	0	0	0	356	356	17449	914.82	2	-30.49	504.00	252.00	22.68	103.29	125.97	-75.63	121.82	46.19	2 Times NH-702B	VILL-SAOSHOU	94°52'56.23"	26°22'25.77"
63	63	63/0	DD	BB	0		31°33'30"LT	6	7.5	6	6	0	0	0	0	148	148	17597	904.93	0.5	-2.39	316.00	158.00	44.71	416.04	460.75	26.18	626.22	652.40		VILL-SAOSHOU	94°52'56.45"	26°22'30.52"
64	64	64/0	DC	BB	0	X-Arm Strengthening Suggested	15°12'44"RT	6	9	6	6	0	0	0	0	168	168	17765	875.17	1.5	-30.76	337.00	168.50	-248.04	660.20	412.16	-458.22	1024.62	566.40	NH-702B	VILL-SAOSHOU	94°52'53.48"	26°22'35.29"
65	65	65/0	DB	BB		X-Arm Strengthening Suggested	05°31'51"LT	0	1.5	0	0	0	0	0	0	169	169	17934	827.52	1.5	-53.65	629.00	314.50	-491.20	229.57	-261.63	-855.62	-229.29	-626.33	Nala, Orange Garden	VILL-SAOSHOU	94°52'52.35"	26°22'40.88"
66	66	66/0	DC	BB			21°57'59"LT	0	0	1.5	1.5	0	0	0	0	460	460	18394	827.63	1.5	0.11	813.00	406.50	230.43	-235.46	-5.03	230.71	-496.24	-265.53	Nala, Orange Garden	VILL-AUCHING	94°52'50.21"	26°22'55.65"
67	67	67/0	DD	BB			47°22'49"RT	1.5	0	0	1.5	0	0	0	0	353	353	18747	907.32	1	80.19	511.00	255.50	588.46	-285.99	302.47	849.24	-517.03	332.20	Pond, 2 Nos. Orange Garden	VILL-AUCHING	94°52'43.82"	26°23'05.56"
68	68	68/0	DB	BB	0	X-Arm Strengthening Suggested	10°07'27"LT	4.5	4.5	3	3	0	0	0	0	158	158	18905	835.62	0.5	31.80	375.00	187.50	443.99	320.68	764.67	675.03	455.00	1130.03	2 Nos. Orange Garden, Vill Road, NH-702B	VILL-AUCHING	94°52'45.47"	26°23'10.47"
69	69	69/0	DB	BB	0		10°18'57"LT	6	4.5	3	3	0	0	0	0	217	217	19122	809.73	0	-25.39	463.00	231.50	-103.68	195.32	91.63	-238.00	241.10	3.10	NH-702B	VILL-AUCHING	94°52'46.33"	26°23'17.44"
70	70	70/0	DC	BB	0		28°16'27"LT	4.5	4.5	3	3	0	0	0	0	246	246	19368	899.92	0	-9.81	518.00	259.00	50.68	163.67	214.35	4.90	181.18	186.09		VILL-AUCHING	94°52'45.81"	26°23'25.49"
71	71	71/0	DB	BB			03°14'27"RT	0	1.5	0	0	0	0	0	0	272	272	19640	899.27	0.5	-4.15	600.00	300.00	108.33	261.47	369.81	90.82	323.18	413.99	Nala	VILL-AUCHING	94°52'40.56"	26°23'32.97"
72	72	72/0	DC	BB			24°03'18"RT	0	0	0	0	0	0	0	0	328	328	19968	883.14	2	-17.63	590.00	295.00	66.53	180.49	247.02	4.82	211.82	216.64	Nala, Orange	VILL-SAKSHI	94°52'34.90"	26°23'42.31"

SUBMITTED BY:
SHYAMA POWER(I) LTD.

CHECKED BY:
P.G.C.I.L

DGM.
K. K. [illegible]
पावरग्रिड, एन ई आर पी एस आई पी., लडलंड
POWERGRID, NERPSIP, LONGLENG

APPROVED BY:
P.G.C.I.L

एल. ए. शर्मा / L. A. Sharma
महाप्रबंधक / General Manager
एन. ई. आर. पी. एस. आई. पी.
पावरग्रिड / POWERGRID
लडलंड / Longleng

CLIENT:P.G.C.I.L

DETAILED SURVEY TOWER SCHEDULE

LINK:132KV S/C (On D/C Tower) Tuensang - Longleng T/L

SL NO	AP NO	TOWER NO	TYPE OF TOWER	CONNECT WITH	CONNECT WITH	REMARKS	ANGLE OF DEVIATION	LEG EXTENSION				CHIMNEY EXTENSION				SPAN IN (M)	SEC. LENG.	CUMLTV. LENGTH	R.L	C.P.D.	LEVEL DIFF.	SUM OF ADJ.	WIND SPAN	WEIGHT SPAN IN (HOT)			WEIGHT SPAN IN (			MAJOR CROSSING DETAIL	VILL NAME	GPS CO-ORDINATE WGS-84	
								A	B	C	D	A	B	C	D									LEFT	RIGHT	TOTAL	LEFT	RIGHT	TOTAL			EASTING	NORTHING
23	22	22/0	DC	BB	0		17°52'42"RT	6	9	7.5	6	0	0	0	0				857.17	2.5		619.00	309.50	185.47	221.03	406.50	200.65	267.26	467.91		VILL-TUENSANG	94°49'48.08"	26°17'17.64"
24	23	23/0	DB	BB	0		10°03'55"LT	9	9	6	6	1.5	1.5	0	0	296	296	5982	842.75	0	-11.92	808.00	404.00	74.97	104.76	179.73	28.74	9.02	37.76	2 Times NH-702B, Nala	VILL-TAGHI	94°49'56.36"	26°17'23.77"
25	25	25/0	DC	BB	0	Used DC tower instead of DB due to Sum of Adj. Span Limit Crossed	11°40'48"RT	9	9	9	9	3	3	0	0	512	512	6494	885.45	3	42.70	772.00	386.00	407.24	289.72	696.97	502.98	390.83	893.81	2 Times NH-702B	VILL-TAGHI	94°50'08.17"	26°17'36.74"
26	26	26/0	DC	BB	0		19°49'31"RT	9	7.5	6	6	0	0	0	0	260	260	6754	864.05	1.5	-22.90	524.00	262.00	-29.72	-159.05	-188.77	-130.83	-343.29	-474.12	NH-702B, Nala	VILL-TAGHI	94°50'15.51"	26°17'41.81"
27	27	27/0	DB	BB	0	X-Arm Strengthening Suggested	04°14'02"RT	9	9	9	9	3	1.5	0	0	264	264	7018	903.92	2	42.37	438.00	219.00	423.05	112.33	535.37	607.29	128.36	735.64	NH-702B	VILL-TAGHI	94°50'24.52"	26°17'44.50"
28	28	28/0	DC	BB	0		17°07'08"LT	9	9	9	9	1.5	3	0	0	174	174	7192	901.99	2.5	-2.43	473.00	236.50	61.67	44.88	106.55	45.64	-21.35	24.29		VILL-TAGHI	94°50'30.72"	26°17'45.78"
29	29	29/0	DD	BB	0		39°35'14"LT	9	9	9	9	0	0	0	0	299	299	7491	920.24	3.5	17.25	440.00	220.00	254.12	58.80	312.92	320.35	51.39	371.74	2 Times NH-702B	VILL-TAGHI	94°50'40.11"	26°17'50.61"
30	30	30/0	DC	BB	0		22°19'50"RT	6	9	6	6	0	0	0	0	141	141	7632	923.15	2.5	0.91	548.00	274.00	82.20	210.14	292.34	89.61	214.34	303.95		VILL-TAGHI	94°50'41.79"	26°17'54.90"
31	31	31/0	DB	BB	0		11°35'52"RT	4.5	4.5	3	3	0	0	0	0	407	407	8039	923.16	1	-1.49	703.00	351.50	196.86	84.22	281.08	192.66	43.85	236.51	2 Times NH-702B	VILL-TAGHI	94°50'51.47"	26°18'04.77"
32	32	32/0	DC	BB	0		25°26'18"LT	6	4.5	3	4.5	0	0	0	0	296	296	8335	933.07	0.5	10.41	510.00	255.00	211.78	343.68	555.46	252.15	493.51	745.66		VILL-TUENSANG	94°51'00.08"	26°18'10.68"
33	33	33/0	DD	BB			32°09'28"RT	1.5	1.5	0	0	0	0	0	0	214	214	8549	909.14	1.5	-27.93	547.00	273.50	-129.68	56.28	-73.41	-279.51	-13.50	-293.01		VILL-TUENSANG	94°51'03.64"	26°18'16.64"
34	34	34/0	DD	BB	0		41°51'25"LT	4.5	6	3	3	0	0	0	0	333	333	8882	926.38	1.5	20.24	501.00	250.50	276.72	158.37	435.10	346.50	205.45	551.95	2 Times NH-702B	VILL-TUENSANG	94°51'14.13"	26°18'22.13"
35	35	35/0	DD	BB			32°40'18"LT	1.5	1.5	0	0	0	0	0	0	168	168	9050	922.49	1.5	-6.89	445.00	222.50	9.63	140.46	150.09	-37.45	141.71	104.25		VILL-TUENSANG	94°51'16.08"	26°18'27.28"
36	36	36/0	DB	BB	0		00°34'43"RT	6	7.5	6	6	0	0	0	0	277	277	9327	916.89	2	-0.30	648.00	324.00	136.54	63.93	200.47	135.29	-13.02	122.27		VILL-TUENSANG	94°51'13.49"	26°18'35.98"
37	37	37/0	DB	BB			11°04'56"RT	1.5	1.5	0	0	0	0	0	0	371	371	9698	946.06	0.5	24.87	765.00	382.50	307.07	310.69	617.75	384.02	382.65	766.67	2 Times NH-702B	VILL-TAGHI	94°51'10.19"	26°18'47.84"
38	39	39/0	DD	BB			42°22'20"RT	1.5	1.5	0	0	0	0	0	0	394	394	10092	922.36	1.5	-24.70	844.00	422.00	83.31	407.31	490.63	11.35	522.72	534.07	2 Times NH-702B	VILL-TAGHI	94°51'09.56"	26°19'00.56"
39	40	40/0	DC	BB			18°04'20"LT	0	0	0	0	0	0	0	0	450	450	10542	876.62	1	-45.24	752.00	376.00	42.69	-58.39	-15.70	-72.72	-190.94	-263.66	Nala	VILL-TAGHI	94°51'19.80"	26°18'11.87"
40	41	41/0	DB	BB	0		13°49'03"RT	7.5	6	6	6	0	0	0	0	302	302	10844	905.49	1	34.87	521.00	260.50	360.39	-192.58	167.81	492.94	-383.80	109.14		VILL-SANGCHEN	94°51'23.67"	26°19'20.98"
41	42	42/0	DB	BB	0	X-Arm Strengthening Suggested	05°47'01"LT	7.5	7.5	6	6	0	0	0	0	219	219	11063	941.97	1	36.48	552.00	276.00	411.58	565.57	977.15	602.80	818.19	1420.99	NH-702B	VILL-SANGCHEN	94°51'28.16"	26°19'26.89"
42	43	43/0	DC	BB			24°57'58"RT	0	1.5	0	0	0	0	0	0	333	333	11396	874.69	1	-73.28	601.00	300.50	-232.57	370.50	137.92	-485.19	520.20	35.01	NH-702B	VILL-SANGCHEN	94°51'33.95"	26°19'36.25"
43	44	44/0	DB	BB	0		10°28'21"LT	9	9	9	9	0	0	0	0	268	268	11664	832.24	2.5	-34.95	616.00	308.00	-102.50	174.10	71.61	-252.20	174.17	-78.03		VILL-SANGCHEN	94°51'41.70"	26°19'41.54"
44	45	45/0	DC	BB	0	X-Arm Strengthening Suggested	19°49'60"RT	4.5	6	3	3	0	0	0	0	348	348	12012	836.22	0.5	-0.02	648.00	324.00	173.90	427.82	601.72	173.83	603.69	777.52	Nala	VILL-SANGCHEN	94°51'50.43"	26°19'49.58"
45	46	46/0	DD	BB	0		40°23'59"LT	6	3	3	3	0	0	0	0	300	300	12312	790.76	1	-45.96	549.00	274.50	-127.82	123.04	-4.78	-303.69	122.12	-181.57	Vill Road	VILL-SANGCHEN	94°52'00.16"	26°19'54.05"
46	47	47/0	DC	BB			18°54'56"RT	0	0	0	0	0	0	0	0	249	249	12561	793.96	1	0.20	633.00	316.50	125.96	312.57	438.52	126.88	388.89	515.77		VILL-SANGCHEN	94°52'03.68"	26°20'01.39"
47	48	48/0	DB	BB			07°34'44"LT	0	0	0	0	0	0	0	0	384	384	12945	768.43	1	-25.53	755.00	377.50	71.43	-131.64	-60.20	-4.89	-332.39	-337.28	Nala	VILL-SANGCHEN	94°52'12.91"	26°20'10.85"

SUBMITTED BY:
SHYAMA POWER(I) LTD.

CHECKED BY:
P.G.C.I.L

के.के. मेधी, उप महाप्रबंधक
K.K. MEDHI, Deputy General Manager
पावरग्रिड, एन.ई.आर.पी.एस.आई.पी., लंडलेंग
POWERGRID, NERPSIP, LONGLENG

APPROVED BY:
P.G.C.I.L

CLIENT:P.G.C.I.L

DETAILED SURVEY TOWER SCHEDULE

LINK:132KV S/C (On D/C Tower) Tuensang - Longleng T/L

SL NO	AP NO	TOWER NO	TYPE OF TOWER	CONNECT WITH	CONNECT WITH	REMARKS	ANGLE OF DEVIATION	LEG EXTENSION				CHIMNEY EXTENSION				SPAN IN (M)	SEC. LENG.	CUM.LTV LENGTH	R.L	C.P.D.	LEVEL DIFF.	SUM OF ADJ.	WIND SPAN	WEIGHT SPAN IN (HOT)			WEIGHT SPAN IN (			MAJOR CROSSING DETAIL	VILL NAME	GPS CO-ORDINATE WGS-84	
								A	B	C	D	A	B	C	D									LEFT	RIGHT	TOTAL	LEFT	RIGHT	TOTAL			EASTING	NORTHING
72	72	72/0	DC	BB			24°03'18"RT	0	0	0	0	0	0	0	0				883.14	2		590.00	295.00	66.53	180.49	247.02	4.82	211.82	216.64		VILL-SAKSHI	94°52'34.90"	26°23'42.31"
73	73	73/0	DB	BB			11°29'47"RT	1.5	1.5	0	0	1.5	0	0	0	262	262	20230	873.99	0	-7.15	695.00	347.50	81.51	304.12	385.63	50.18	359.58	409.76	Nala, Orange Garden	VILL-SAKSHI	94°52'34.16"	26°23'50.77"
74	74	74/0	DC	BB	0	Used DC tower instead of DB due to Sum of Adj. Span Limit Crossed(X-Arm Strengthening Suggested)	12°09'01"LT	9	6	6	6	0	0	0	0	433	433	20663	848.07	1	-20.92	803.00	401.50	128.88	619.01	747.89	73.42	893.74	967.16	Nala, 11KV	VILL-SAKSHI	94°52'38.16"	26°24'04.81"
75	75	75/0	DB	BB			03°30'42"LT	0	0	0	0	0	0	0	0	370	370	21033	785.52	1	-88.55	694.00	347.00	-249.01	-22.59	-271.60	-523.74	-139.44	-663.19	Nala	VILL-SAKSHI	94°52'35.19"	26°24'16.74"
76	76	76/0	DD	BB	0		34°06'35"RT	6	6	3	3	0	3	0	0	324	324	21357	796	1.5	32.98	667.00	333.50	346.59	319.80	666.40	463.44	413.68	877.12	Nala	VILL-YIMCHUNG	94°52'33.59"	26°24'27.29"
77	77	77/0	DD	BB			40°59'06"LT	0	1.5	0	0	0	0	0	0	343	343	21700	770.95	1.5	-28.05	588.00	294.00	23.20	-61.51	-38.31	-70.68	-177.99	-248.68	Vil Road	VILL- SAKSHI	94°52'39.01"	26°24'37.27"
78	78	78/0	DC	BB	0	X-Arm Strengthening Suggested	28°50'46"LT	6	3	3	3	0	0	0	0	245	245	21945	793.81	2.5	24.86	341.00	170.50	306.51	-367.96	-61.45	422.99	-631.28	-208.28		VILL- SAKSHI	94°52'36.90"	26°24'44.88"
79	79	79/0	DB	BB	0	X-Arm Strengthening Suggested	01°54'23"RT	9	9	9	9	0	0	1.5	0	98	96	22041	807.83	0.5	22.02	636.00	318.00	463.96	705.77	1169.73	727.28	981.62	1708.90	LT Line, Vill Road, FP	VILL- SAKSHI	94°52'34.36"	26°24'47.18"
80	80	80/0	DC	BB	0	Used DC tower instead of DB due to Sum of Adj. Span Limit Crossed	12°30'57"RT	6	4.5	3	4.5	0	0	0	0	540	540	22581	684.57	1	-129.76	804.00	402.00	-165.77	-156.09	-321.86	-441.62	-338.46	-780.08	Nala, 11KV	VILL- SAKSHI	94°52'21.51"	26°25'00.44"
81	81	81/0	DB	BB		X-Arm Strengthening Suggested	00°35'24"RT	0	0	0	0	0	0	0	0	264	264	22845	729.01	0.5	41.94	420.00	210.00	420.09	356.53	776.62	602.46	532.84	1135.31	NH-702B, FP	VILL- SAKSHI	94°52'17.09"	26°25'07.81"
82	82	82/0	DB	BB			05°51'27"LT	0	0	0	1.5	0	0	0	0	156	156	23001	705.55	1	-23.96	228.00	114.00	-200.53	127.68	-72.85	-376.84	185.72	-191.13		VILL- SAKSHI	94°52'14.41"	26°25'12.39"
83	83	83/0	DC	BB	0	X-Arm Strengthening Suggested	19°33'57"RT	9	7.5	9	6	0	0	0	0	72	72	23073	695.41	0.5	-3.64	179.00	89.50	-55.68	1318.35	1262.67	-113.72	2119.03	2005.31		VILL- SAKSHI	94°52'12.95"	26°25'14.39"
84	83A	83A/0	DB	BB		X-Arm Strengthening Suggested	14°00'47"LT	0	1.5	1.5	0	0	0	0	0	107	107	23180	626.78	0.5	-74.63	632.00	316.00	-1211.35	388.75	-822.60	-2012.03	468.67	-1543.35	NH-702B	VILL- SAKSHI	94°52'12.07"	26°25'17.75"
85	84	84/0	DB	BB	0	X-Arm Strengthening Suggested	02°48'17"LT	4.5	3	3	3	0	0	0	0	525	525	23705	587.73	1	-36.55	649.00	324.50	136.25	-370.16	-233.91	56.33	-643.73	-587.40	River, Nala	VILL- YONGPHANG	94°52'03.37"	26°25'32.88"
86	85	85/0	DC	BB		X-Arm Strengthening Suggested	20°25'20"RT	1.5	1.5	0	0	0	0	0	0	124	124	23829	619.78	0.5	29.55	487.00	243.50	494.16	-212.22	281.94	767.73	-461.45	306.28		VILL- YONGPHANG	94°52'01.18"	26°25'36.53"
87	86	86/0	DC	BB		Used DC tower instead of DB due to Sum of Adj. Span Limit Crossed(X-Arm Strengthening Suggested)	13°59'50"LT	0	0	0	1.5	0	0	0	0	383	383	24192	699.59	1.5	78.81	689.00	344.50	575.22	-113.92	461.30	824.45	-289.21	535.24	Nala, NH-702B	VILL- YONGPHANG	94°51'58.85"	26°25'48.01"
88	87	87/0	DB	BB	0	X-Arm Strengthening Suggested	03°21'49"LT	9	7.5	6	6	0	0	0	0	326	326	24518	744.37	2.5	49.78	537.00	268.50	439.92	-70.86	369.05	615.21	-182.50	432.71	2 Times NH-702B	VILL- YONGPHANG	94°51'54.05"	26°25'57.66"
89	88	88/0	DB	BB	0		13°46'05"RT	6	9	7.5	6	0	0	0	0	211	211	24729	762.39	0	20.52	589.00	294.50	281.86	107.73	389.59	393.50	56.28	449.79		VILL- YONGPHANG	94°51'50.55"	26°26'03.72"
90	89	89/0	DC	BB			15°34'18"LT	1.5	0	0	0	0	0	0	0	378	378	25107	786.83	1.5	16.94	802.00	401.00	270.27	35.57	305.84	321.72	-76.11	245.61	2 Times NH-702B, Nala	VILL- YONGPHANG	94°51'47.35"	26°26'15.59"
91	90	90/0	DC	BB		X-Arm Strengthening Suggested	22°02'00"LT	1.5	0	0	1.5	0	0	0	0	424	424	25531	827.08	0.5	41.25	563.00	281.50	388.43	-387.78	0.65	500.11	-677.25	-177.14	2 Times NH-702B, Nala	VILL- YONGPHANG	94°51'39.82"	26°26'27.75"
92	91	91/0	DD	BB	0		33°58'01"RT	3	3	3	3	0	0	0	0	139	139	25670	859.63	1	35.05	551.00	275.50	526.78	163.13	689.91	816.25	135.99	952.24	Vill Road, FP	VILL- YONGPHANG	94°51'35.86"	26°26'30.43"
93	92	92/0	DB	BB	0	X-Arm Strengthening Suggested	09°13'41"LT	4.5	3	3	3	0	0	0	0	412	412	26082	889.87	1.5	9.74	811.00	405.50	248.87	-369.27	-120.39	276.01	-729.30	-453.29	2 Times NH-702B, Vill Road, Nala	VILL- YONGPHANG	94°51'31.39"	26°26'43.27"
94	93	93/0	DC	BB	0	X-Arm Strengthening Suggested	15°23'44"LT	3	3	4.5	6	0	0	0	0	399	399	26481	894.51	1	125.14	617.00	308.50	768.27	-398.36	369.91	1128.30	-719.52	408.78	FP, Vill Road, Nala	VILL- YONGPHANG	94°51'24.80"	26°26'54.78"
95	94	94/0	DC	BB	0	X-Arm Strengthening Suggested	28°19'20"RT	9	9	9	9	0	0	0	0	218	218	26699	1051	2.5	60.99	396.00	198.00	616.36	503.04	1119.40	937.52	765.14	1702.66	FP	VILL- YONGPHANG	94°51'19.52"	26°27'00.08"
96	95	95/0	DB	BB	0	X-Arm Strengthening Suggested	13°30'11"LT	7.5	9	6	6	0	0	0	0	178	178	26877	1011.4	0.5	-40.64	573.00	286.50	-325.04	1024.30	699.26	-587.14	1547.69	960.55	LT Line, Vill Road	VILL- YONGPHANG	94°51'17.93"	26°27'05.47"
97	96	96/0	DB	BB	0	X-Arm Strengthening Suggested	02°59'59"RT	3	3	3	3	0	0	0	0	395	395	27272	834.27	0.5	-180.09	948.00	474.00	-629.30	360.84	-268.46	-1152.69	414.24	-738.45	FP, Nala	VILL- YONGPHANG	94°51'11.14"	26°27'18.99"

SUBMITTED BY:
SHYAMA POWER(I) LTD

CHECKED BY:
P.G.C.I.L

के.के. मेधी, उप महाप्रबंधक
K.K. MEDHI, Deputy General Manager
पावरग्रिड, एन.ई.आर.पी.एस.आई.पि., लंडलेंड
POWERGRID, NERPSIP, LONGLENG

एल. ए शर्मा / L. A. Sharma
महाप्रबंधक
एन. ई. आर. पी. ए
पावरग्रिड / P
कोहिमा : नागालैण्ड / Kohima : Nagaland

APPROVED BY:
P.G.C.I.L

CLIENT:P.G.C.I.L

DETAILED SURVEY TOWER SCHEDULE

LINK:132KV S/C (On D/C Tower) Tuensang - Longleng T/L

SL NO	AP NO	TOWER NO	TYPE OF TOWER	CONNECT WITH	CONNECT WITH	REMARKS	ANGLE OF DEVIATION	LEG EXTENSION				CHIMNEY EXTENSION				SPAN IN (M)	SEC. LENG.	CUMLTV - LENGTH	R.L	C.P.D.	LEVEL DIFF.	SUM OF ADJ.	WIND SPAN	WEIGHT SPAN IN (HOT)			WEIGHT SPAN IN (			MAJOR CROSSING DETAIL	VILL NAME	GPS CO-ORDINATE WGS-84	
								A	B	C	D	A	B	C	D									LEFT	RIGHT	TOTAL	LEFT	RIGHT	TOTAL			EASTING	NORTHING
97	96	96/0	DB	BB	0	X-Arm Strengthening Suggested	02°59'59"RT	3	3	3	3	0	0	0	0				834.27	0.5		948.00	474.00	-629.30	360.84	-268.46	-1152.69	414.24	-738.45		VILL- YONGPHANG	94°51'11.14"	26°27'16.99"
98	97	97/0	DD	BB		X-Arm Strengthening Suggested	32°59'36"RT	0	0	0	1.5	0	0	0	0	553	553	27825	812.05	1	-25.72	745.00	372.50	192.16	-719.78	-527.62	138.76	-1236.18	-1097.42	2 Times NH-702B, Nala			
99	98	98/0	DB	BB	0	X-Arm Strengthening Suggested	10°40'49"RT	7.5	7.5	6	6	0	0	0	0	192	192	28017	891.42	0	86.37	443.00	221.50	911.78	-918.80	-7.02	1428.18	-1579.86	-151.68	11KV	VILL- PONGO	94°51'03.38"	26°27'39.25"
100	99	99/0	DD	BB	0	X-Arm Strengthening Suggested	40°39'03"LT	9	6	6	9	1.5	0	0	1.5	251	251	28268	1038.5	0.5	144.54	491.00	245.50	1169.80	-1150.34	19.46	1830.86	-1954.48	-123.62		VILL- PONGO	94°51'08.09"	26°27'46.92"
101	100	100/0	DD	BB	0	X-Arm Strengthening Suggested	53°34'14"LT	9	9	9	9	0	0	1.5	3	240	240	28508	1203.6	2.5	168.12	506.00	253.00	1390.34	194.36	1584.69	2194.48	233.20	2427.68		VILL- PONGO	94°51'02.65"	26°27'54.03"
102	101	101/0	DC	BB			22°41'57"LT	0	0	0	0	0	0	0	0	266	266	28774	1202.1	1	-9.00	555.00	277.50	71.64	27.97	99.62	32.80	-45.79	-12.99		VILL- PONGO	94°50'53.39"	26°27'58.19"
103	102	102/0	DD	BB			11°26'27"LT	0	0	1.5	0	0	0	0	0	289	289	29063	1220.7	1	18.57	366.00	183.00	261.03	504.11	765.14	334.79	798.86	1133.65		VILL- PONGO	94°50'43.07"	26°27'55.08"
104			Gantry					0	0	0	0	0	0	0	0	77	77	29140	1199.9		-19.77	77.00	38.50	-427.11		-427.11	-721.86		-721.86		VILL- PONGO	94°50'40.31"	26°27'54.40"

SUBMITTED BY:
SHYAMA POWER(I) LTD.

CHECKED BY:
P.G.C.I.L

के.के. मेधी, उप महाप्रबंधक
K.K. MEDHI, Deputy General Manager
पावरग्रिड, एन.ई.आर.पि.एस.आई.पि., लंगलेंग
POWERGRID, NERPSIP, LONGLENG

एल. ए शर्मा/L.A. Sharma
महाप्रबंधक/General Manager
एन. ई. आर. पी. एस. (आई.पी.)
पावरग्रिड/POWERGRID
कोहिमा : नागालैन्ड/Kohima : Nagaland

APPROVED BY:
P.G.C.I.L

ANNEXURE III

NoC from Concerned Land owner/ Headman/ Village Council

OFFICE OF THE
TSEMINYU VILLAGE VILLAGE COUNCIL
P.O TSEMINYU – 797109 KOHIMA: NAGALAND

Ref. No. TS 30719 *Date* 30.07.2019

NO OBJECTION CERTIFICATE

This is to certify that construction of upcoming 220 KV line from AP-73/0 to AP-89/0 under the jurisdiction of Tseminyu (ur) is well known from every location as proposed by your company for the purpose, using my authority I have no objection towards the execution of work any time at your own convenience.

Wishing the Project grand success.

Chairman
Tseminyu Village Council

(NRILO KHING)
Chairman

OFFICE OF THE VICE-CHAIRMAN
ALICHEN COMPOUND COMMITTEE
SPO Alichen-798607 Mokokchung Dist. Nagaland

Email: alncmpd@rediffmail.com

Office : +91-9436647087

NO.AC-01/Misc-NOC/2019/57 /Dated the Alichen 2 th Feb' 19

NO OBJECTION CERTIFICATE

This is to certify that construction of upcoming 220 KV line from AP-277/0 to AP-288/0 under the jurisdiction of Alichen (ur) is well known from every location as proposed by your company. For the purpose, using my authority I have no objection towards the execution of work any time at your own convenience.

Wishing the project a grand success.

Office of the Alichen Compound Vice Chairman Date 2/2/19 Mokokchung Nagaland

Vice Chairman
Alichen Compound
(KIKAMERI LONGKUMER)
Vice- Chairman
(Name & Designation of the issuing authority)

OFFICE OF THE
VILLAGE COUNCIL UNGMA
MOKOKCHUNG : NAGALAND P.O. MOKOKCHUNG
P.S. II MOKOKCHUNG
PIN – 798601

REF.NO/UVC/..... Date: 2.2.2019

No objection certificate

This is to certify that construction of upcoming 220 KV line @ AP-289 and AP-291 under the village UNGMA jurisdiction is well known every location as proposed by your company. Hence the village authority has duly issue no objection certificate for execution of work any time as your own convenience.

Wishing the Project a grand success.

Thanking You.

(ALEMTOSHI JAMIR)
Chairman
Village Council Ungma
Mokokchung - 798601
Nagaland

OFFICE OF THE

NSUNYU VILLAGE COUNCIL

P.O/P.S. Tseminyu, Kohima - Nagaland - 797109

Ref. No.....

Date. 25/07/2018...

NO OBJECTION CERTIFICATE (NOC)

This is to certify that the Nsunyu village council have no objection to the power Department to carry out the survey for construction of 220kV S/C (on D/C towers) (PGCIL) transmission lines under North eastern Region System improvement project within its jurisdiction.

The village council will extent its full cooperation for implementation of the said project.

(JESSE SEB)

Chairman

Chairman
Nsunyu Village Council

Nsunyu Village Council

OFFICE OF THE NSUNYU VILLAGE COUNCIL
Date.....

OFFICE OF THE

TEROGVUNYU VILLAGE COUNCIL

P.O. TSEMINYU - 797109

Dist. Kohima : Nagaland

Ref. No.....

Date. 14th July 2018

NO OBJECTION CERTIFICATE

The Terogvunyu Village council has no objection in regard to Survey (erection of power Tower) by the power grid co-operation of India within its village jurisdiction.

The village council is also acknowledge the department for extending any possible land/ property damage compensation to the affected owner.

The village council with all the success.

(DANIEL TEP)

Chairman

Chairman
Terogvunyu Village Council

ANNEXURE IV

Sample Case of Compensation Payment

DEPARTMENT OF POWER, GOVT. OF NAGALAND
Executing Agency : Power Grid Corporation of India Ltd.,
(A Govt of India Enterprise)

पावरग्रिड

NOTICE CUM COMPENSATION CERTIFICATE FOR CROP AND TREE

Sl. No.: ..... Sl. No. 097

To, Date 28/08/2019

Shri/Ms. Thenlo Jasu S/W/o Khonkhü Jasü Village Teroguungu

Tahsil ..... District Kohima State Nagaland

Subject : Construction of 220 kV Power Transmission System from New Kohima (Zhadima) To Mokokchung Under NERPSIP.

Sir/Madam,

Under the power vested in The Electricity Act 2003, Section 68 and 164 read with part III of Indian Telegraph Act 1885 and The Central Electricity Authority (measures relating to Safety and Electric Supply) Regulation 2010, A Notice is hereby given that 220 kV New Kohima (Zhadima) To Mokokchung Transmission Line will go through your property.

Certain minimum unavoidable damage of Crop / Tree is likely to take place during the Foundation / Erection / Stringing works of the aforesaid transmission line. The tree(s) or crop(s) so fell/Cut or dealt with will be handed over to you. You are therefore requested to remain present to receive the same personally. The compensation for yield component of the tree(s) so fall and the crop(s) actually/ damaged will be paid to you as assessed by the Executive Magistrate/ Revenue Department or any other Competent Authority specified by the appropriate Government in this behalf.

S.NO	LOCATION/ SPAN	DETAIL OF DAMAGES DURING CONSTRUCTION				
		LAND KHASARA/DAG/ PATTA NO	NAME OF THE CROP OR TREES	AREA OR NOS	*Size/Girth	REMARKS
	AP-69					Paddy field

* GIRTH OF THE TREE MEANS CIRCUMFERENCE AT CHEST LEVEL

Received Notice with consent for work.

Owner's Signature

Sign of Witness I .....

Sign of Witness II.....

Chairman
Village Council Henbenji

For and On behalf of Department of Power Govt. of Nagaland

Signature of POWERGRID

VERIFICATION BY REVENUE AUTHORITY

Certified that Land under Khasra / Dag / Patta no.....of Village.....Tahsil.....
District..... State.....belongs to Sri / Smt .....Son / Wife of .....
He / She is sole / shared owner of the above mentioned Land / property.

Seal & Signature of
Circle Officer / District Administration

POWERGRID CORPORATION OF INDIA LTD
LAND COMPENSATION ASSESSMENT SHEET

Name of the Transmission Line: 132kV D/C New Kohima-New Secretariat Complex Transmission Line

Sl No	Tax No/Span	Notice No./Date	Name of Cultivators with Father's name	Village,Tahsil, District	Khasar/dag/ Patta No	Affected Land Size(in sq m)	Area(in Sq.ft)	Rate in Rs. Per Unit	Compensation Payable in Rs.	Bank Details	Remarks
1	AP5	Notice No-NL/132kV NK-NS/LAND/15 Dated:24.01.2019	Landowner's name- Zanivi o Father's Name- Lt.Yanallie	Zhadima		51.9841	559.504868	95	53152.96249		Land has been classified as Commercial Plantation
2	AP6	Notice No-NL/132kV NK-NS/LAND/20 Dated:15.02.2019	Landowner's Name-Duotsolie Angami Father's Name-Rheitsil	Zhadima		67.0924	722.115501	95	68600.97261		Land has been classified as Commercial Plantation
3	AP7	Notice No-NL/132kV NK-NS/LAND/31 Dated:15.02.2019	Landowner's Name-Seyie Kuotsu Father's Name-Razouvolie	Zhadima		134.8153	1451.01707	95	137846.622		Land has been classified as Commercial Plantation
6	AP10	Notice No-NL/132kV NK-NS/LAND/30 Dated:04.07.2019	Landowner's Name- Zevolhoulie Father's Name-Lhoulie	Zhadima		57.9577	623.798725	95	59260.87888		Land has been classified as Commercial Plantation
7	AP11	Notice No-NL/132kV NK-NS/LAND/18 Dated:13.02.2019	Landowner's Name-Niezelie Father's Name-Kibvelhou	Zhadima		74.8052	805.128368	95	76487.19492		Land has been classified as Commercial Plantation
9	AP16	Notice No-NL/132kV NK-NS/LAND/010 Dated:24.01.2019	Landowner's Name-Rokososie Khoubve Father's Name-Shouchiilhou	Zhadima		79.754	858.392302	95	81547.26869		Land has been classified as Commercial Plantation
10	AP18	Notice No-NL/132kV NK-NS/LAND/010 Dated:24.01.2019	Landowner's Name-Thepfurie-o Father's Name-Lt.Kieo	Zhadima		192.938	2076.59169	150	311488.7541		Land has been classified as Residential

Seal and Signature of POWERGRID
एच. के चुतिया / H.K. Chutia
उप प्रबंधक / Dy. Manager
एन. इ. आर. पी. एस. आई. पी. / (NERPSIP)
पावरग्रिड / POWERGRID
कोहिमा : नागालैन्ड / Kohima : Nagaland

Khruzo Rhakho
1/11/19

Seal and Signature of the Department of Power
Sub-Divisional Office
Transmission Sub-Division
Kohima : Nagaland

Seal and Signature of Circle Officer/District Administration
Revenue Officer
Kohima, Nagaland

POWERGRID CORPORATION OF INDIA LTD

Crop and Tree COMPENSATION ASSESSMENT SHEET

Name of the Transmission Line: 132kV D/C New Kohima-New Secretariat Complex Transmission Line

Sl No.	Loc No/Span	Notice No./Date	Name of Cultivators with Father's name	Village,Tahsil, District	Khasar/dag/ Patta No.	Detail of Damage Crop/tree	Girth(In feet)	Qty/Area	Rate in Rs. Per Unit	Compensation Payable In Rs.	Bank Details	Remarks
1	AP5	Notice No-NL/132kV NK-NS/LAND/15 Dated:24.01.2019	Landowner's name- Zanivi-o Father's Name- Lt.Yanellie	Zhadima		Tik	2.09	1	200	200		
						Jagia	1.312	1	150	150		
						Jagia	1.312	1	150	150		
						Jagia	1.312	1	150	150		
						Tik	3.6	2	400	800		
						Tik	3.6	2	400	800		
						Tik	1.64	4	200	800		
						Tik	1.96	1	200	200		
						Sochii	2.624	1	150	150		
						Ze	2.624	1	200	200		
						Tik	4.92	1	400	400		
						Chi	3.28	1	400	400		
						Jagia	2.46	1	150	150		
						Jagia	2.46	1	150	150		
						Tik	1.312	1	200	200		
						Tik	2.12	1	200	200		
						Ze	1.31	4	200	800		
						Gamari	3.6	2	400	800		
						Ze	3.11	4	400	1600		
						Tik	4.26	2	400	800		
Total										9100		

Seal and Signature of POWERGRID

एच. के. चुतिया / H.K. Chutia
उप. प्रबंधक / Dy. Manager
एन. इ. आर. पी. एस. आई. पी. / (NERPSIP)
पावरग्रिड / POWERGRID
कोहिमा : नागालैण्ड / Kohima : Nagaland

Khruzo Shakho
29/8/19

Seal and Signature of the Department of Power

Sub-Divisional Officer
Transmission Sub-Divisio..
Kohima : Nagaland

Seal and Signature of Circle Officer/District Administration

Revenue Officer
Kohima, Nagaland

POWERGRID CORPORATION OF INDIA LTD

Crop and Tree COMPENSATION ASSESSMENT SHEET

Name of the Transmission Line: 132kV D/C New Kohima-New Secretariat Complex Tranmission Line

Sl No.	Loc No/Span	Notice No./Date	Name of Cultivators with Father's name	Village, Tahsil, District	Khasar/dag/ Patta No.	Detail of Damage Crop/tree	Girth(in feet)	Qty/Area(i	Rate in Rs. Per Unit	Compensation Payable in Rs.	Bank Details	Remarks
1	AP6	Notice No-NL/132kV NK-NS/LAND/20 Dated:15.02.2019	Landowner's Name-Duotsolie Angami Father's Name-Rheitsh	Zhadima		Mhicho	4.5	1	400	400		
						Ze	4.2	2	400	800		
						Theputsizio	3.4	3	150	450		
						Prizo	4..3	1	150	150		
						Peng0-Tsido	2.82	4	200	800		
						Pegia	2.1	3	150	450		
						Teguo	3.6	5	150	750		
						Kerilnzii	2.8	3	150	450		
						Huto	4.2	1	160	160		
						Sotsii	3.11	1	150	150		
						Ze	3.1	3	400	1200		
Total										5760		

Seal and Signature of POWERGRID

एच. के. चुतिया / H.K. Chutia
उप. प्रबंधक / Dy. Manager
एन. इ. आर. पी. एस. आई. पी. / (NERPSIP)
पावरग्रिड / POWERGRID
कोहिमा : नागालैन्ड / Kohima : Nagaland

Seal and Signature of the Department of Power

Sub-Divisional Officer
Transmission Sub-Divisio
Kohima : Nagaland

Seal and Signature of Circle Officer/District Administration

Revenue Officer
Kohima, Nagaland

Khrizo Shakho
29/3/19

POWERGRID CORPORATION OF INDIA LTD

Crop and Tree COMPENSATION ASSESSMENT SHEET

Name of the Transmission Line: 132kV D/C New Kohima New Secretariat Complex Transmission Line

Sl No.	Loc No/Span	Notice No./Date	Name of Cultivators with Father's name	Village,Tahsil, District	Khasar/dag/ Patta No	Detail of Damage Crop/tree	Girth(in feet)	Qty/Area(i	Rate in Rs Per Unit	Compensation Payable in Rs.	Bank Details
1	AP7	Notice No-NL/132kV NK-NS/LAND/31 Dated:15.02.2019	Landowner's Name-Seyie Kuotsu Father's Name-Razouvolie	Zhadima		Bamboo	0.58- 1.2	50	50	2500	
						Pine tree	0.98	1	200	200	
						Pine tree	2.29	2	200	400	
						Pine tree	1.31	1	200	200	
						Pine tree	1.96	2	200	400	
						Pine tree	2.29	6	200	1200	
						Pine tree	1.8	1	200	200	
						Pine tree	2.29	2	200	400	
						Pine tree	2.62	2	200	400	
						Pine tree	1.96	2	200	400	
						Mhicho	6.56	1	400	400	
						Chevi	3.28	1	150	150	
						Ze	3.28	1	400	400	
						Amla	1.64	1	200	200	
						Chi	5.9	1	400	400	
						Khabo	1.96	1	150	150	
Total										7600	

Seal and Signature of POWERGRID

एच. के. चुतिया / H.K. Chutia
उप. प्रबंधक / Dy. Manager
एन. इ. आर. पी. एस. आई. पी. / (NERPSIP)
पावरग्रिड / POWERGRID
कोहिमा : नागालैन्ड / Kohima : Nagaland

Seal and Signature of the Department of Power

Seal and Signature of Circle Officer/District Administration

Revenue Officer
Kohima, Nagaland

Khabo Khabo
29/3/19

POWERGRID CORPORATION OF INDIA LTD
Crop and Tree COMPENSATION ASSESSMENT SHEET

ame of the Transmission Line: 132kV D/C New Kohima-New Secretariat Complex Tranmission Line

Loc No/Span	Notice No./Date	Name of Cultivators with Father's name	Village,Tahsil, District	Khasar/dag/Patta No.	Detail of Damage Crop/tree	Girth(in feet)	Qty/Area(I	Rate in Rs. Per Unit	Compensation Payable in Rs.	Bank Details	Remarks
AP10	Notice No-NL/132kV NK-NS/LAND/30	Landowner's Name-Zevolhoulie Father's Name-Lhoulie	Zhadima		Thezhii	3.7	8	400	3200		
					Mhicho	1.2	10	200	2000		
					Neem	3.6	6	320	1920		
					Ze	3.1	2	400	800		
					Ze	2	2	200	400		
Total									8320		

Seal and Signature of
POWERGRID
Dy Manager
/ (NERPSIP)
/POWERGRID
Kohima : Nagaland

Khruzo Khaleho
29/3/19

Seal and Signature of the
Department of Power
Sub-Divisional Officer
Transmission Sub-Divisic
Kohima : Nagaland

Seal and Signature of
Circle Officer/District
Administration

Revenue Officer
Kohima, Nagaland

POWERGRID CORPORATION OF INDIA LTD
Crop and Tree COMPENSATION ASSESSMENT SHEET

ne of the Transmission Line: 132kV D/C New Kohima-New Secretariat Complex Transmission Line

Loc No/Span	Notice No./Date	Name of Cultivators with Father's name	Village, Tahsil, District	Khasar/dag /Patta No.	Detail of Damage Crop/tree	Girth (in feet)	Qty/Area(I	Rate in Rs. Per Unit	Compensation Payable in Rs.	Bank Details	Remarks
AP11	Notice No-NL/132kV NK-NS/LAND/18 Dated:13.02.2019	Landowner's Name-NEIZELIE Father's Name-Lt. KIBVELHOU	Zhadima		Neem	4.7	1	320	320		
					Mhicho	6	1	400	400		
					Asam	2.9	1	150	150		
					Mhicho	5.5	1	400	400		
					Thezhii	4.5	1	400	400		
					Thezhii	4.6	1	400	400		
					Thezhii	3.1	7	400	2800		
					Kero	2.11	8	200	1600		
					Mhicho	2.5	15	200	3000		
Total									9470		

Seal and Signature of POWERGRID

एच. के. चुतिया / H.K. Chutia
उप प्रबंधक / Dy. Manager
एन. इ. आर. पी. एस. आई. पी. / (NERPSIP)
पावरग्रिड / POWERGRID
कोहिमा - नागालैन्ड / Kohima : Nagaland

Seal and Signature of the Department of Power

Khonzo Khaching
29/8/19

Sub-Divisional Officer
Transmission Sub-Division
Kohima : Nagaland

Seal and Signature of Circle Officer/District Administration

Revenue Officer
Kohima, Nagaland

POWERGRID CORPORATION OF INDIA LTD
Crop and Tree COMPENSATION ASSESSMENT SHEET

Name of the Transmission Line: 132kV D/C New Kohima-New Secretariat Complex Tranmission Line

Sl No.	Loc No/Span	Notice No./Date	Name of Cultivators with Father's name	Village,Tahsil, District	Khasar/dag/Patta No.	Detail of Damage Crop/tree	Girth(in feet)	Qty/Area(I	Rate in Rs. Per Unit	Compensation Payable in Rs.	Bank Details	Remarks
1	AP16	Notice No-NL/132kV NK-NS/LAND/010 Dated:24.01.2019	Landowner's Name-Rokososie Khoubve Father's Name-Shouchiilhou	Zhadima		Mego	2.64	5	200	1000		
						Phrie	1.6	4	200	800		
						Banana		4	350	1400		
						Miicho	5.6	2	400	800		
						Orange	0.25	10	700	7000		
Total										11000		

Seal and Signature of
POWERGRID

एच. के. चुतिया / H.K. Chutia
उप प्रबंधक / Dy. Manager
एन. इ. आर. पी. एस. आई. पी. / (NERPSIP)
पावरग्रिड / POWERGRID
कोहिमा : नागालैन्ड / Kohima : Nagaland

Seal and Signature of the
Department of Power

Seal and Signature of
Circle Officer/District
Administration

Revenue Officer
Kohima, Nagaland

Karuzo Dhakho
29/8/19

POWERGRID CORPORATION OF INDIA LTD

Crop and Tree COMPENSATION ASSESSMENT SHEET

Name of the Transmission Line: 132kV D/C New Kohima-New Secretariat Complex Tranmission Line

Sl No.	Loc No/Span	Notice No./Date	Name of Cultivators with Father's name	Village,Tahsil, District	Khasar/dag/ Patta No.	Detail of Damage Crop/tree	Girth(in feet)	Qty/Areali	Rate in Rs. Per Unit	Compensation Payable in Rs.	Bank Details	Remarks
1	AP18	Notice No-NL/132kV NK-NS/LAND/21 Dated:15.02.2019	Lanowner's Name-Mezhiituo Khro Father's Name-Vilazhii	Zhadima		Thegaruo	2.62	4	200	800		
						Phezhii	1.312	4	150	600		
						Phedu	7.21	1	150	150		
						Mehie	2.62	5	150	750		
						Keduo	2.29	1	150	150		
						Mhicho	8.201	1	400	400		
						Meru	1.64	1	200	200		
						Thezhii	0.98	10	200	2000		
						Mhicho	3.6	1	400	400		
Total										5450		

Seal and Signature of POWERGRID

एच. के. चुतिया / H.K. Chutia
उप. प्रबंधक / Dy. Manager
एन. इ. आर. पी. एस. आई. पी. / (NERPSIP)
पावरग्रिड / POWERGRID
कोहिमा : नागालैन्ड / Kohima : Nagaland

Seal and Signature of the Department of Power

Sub-Divisional Officer
Transmission Sub-Division
Kohima : Nagaland

Khruzo Phachu
29/8/19

Seal and Signature of Circle Officer/District Administration

Revenue Officer
Kohima, Nagaland

TO WHOM IT MAY CONCERN

This is to certify that an amount of Rs 145446 (In words) one lakh forty five thousand four hundred forty six has been duly compensated to Shri/Ms Seyie Kuotsu for the land and surface damages incurred during the construction of 132kV New-Kohima (Zhadima) to New Secretariat Complex(Nagaland University Campus) Transmission Line under NERPSIP, Nagaland at location no. APT of Zhadima Village, Kohima district measuring an Area of 1451.105 Sq.ft.

10/7/2020

(Signature of landowner)

Witness
(i).

(ii).

(Signature of POWERGRID)

भारतीय स्टेट बैंक
State Bank Of India

(00214)-KOHIMA
NEAR DEPUTY COMMISSIONER'S OFFICE
KOHIMA,NAGALAND 797001
Tel : 370 2291318 Fax : 2291409 IFS Code : SBIN0000214 SWIFT :

केवल 3 महीने के लिए वैध / VALID FOR 3 MONTHS ONLY

05 02 2020
D D M M Y Y Y Y

PAY PETER KUOTSU

को या उनके आदेश पर OR ORDER

रुपये RUPEES One lakh forty five thousand four-hundred forty six only.

अदा करें ₹ 1,45,446/-

खा. सं. Ac No. 10530522383

VALID UPTO ₹ 50 LACS AT NON-HOME BRANCH

CURRENT A/C

PREFIX :
1515000002

MULTI-CITY CHEQUE Payable at Par at All Branches of SBI

O/O DEPUTY COMMISSIONER

Deputy Commissioner
Kohima, Nagaland

⑈869582⑈ 799002102⑆ 000563⑈ 29

34609 / 100 / BLUE ORDER (R / 14/Jun/2017
SESHASAI (D) / CTS-2010

TO WHOM IT MAY CONCERN

This is to certify that an amount of Rs 67580/- (In words) SIXTY SEVEN THOUSAND FIVE HUNDRED EIGHTY has been duly compensated to Shri/Ms ZEVOLHOULIE for the land and surface damages incurred during the construction of 132kV New-Kohima (Zhadima) to New Secretariat Complex(Nagaland University Campus) Transmission Line under NERPSIP, Nagaland at location no. AP-10 of Zhadima Village, Kohima district measuring an Area of 623.837 Sq.ft.

Witness
(i).

(ii).

(Signature of landowner)

(Signature of POWERGRID)

भारतीय स्टेट बैंक
State Bank Of India

(60214)-KOHIMA
NEAR DEPUTY COMMISSIONER'S OFFICE
KOHIMA,NAGALAND 797001
Tel : 370 2291318 Fax : 2291409 IFS Code : SBIN0000214 SWIFT :

केवल 3 महीने के लिए वैध / VALID FOR 3 MONTHS ONLY
0 5 0 2 2 0 2 0
D D M M Y Y Y Y

PAY ZEVOLHOULIE CHOPUO

रुपये RUPEES Sixty seven thousand five hundred eighty only.

को या उनके आदेश पर OR ORDER

अदा करें ₹ 67,580/-

बी. ए. A/c No. 10530522383

VALID UPTO ₹ 50 LACS AT NON-HOME BRANCH

CURRENT A/C
PREFIX :
1515000002

O/O DEPUTY COMMISSIONER

Deputy Commissioner
Kohima, Nagaland

MULTI-CITY CHEQUE Payable at Par at All Branches of SBI

⑈869583⑈ 799002102⑆ 000563⑈ 29

SBISHAASA(D) CTS-2010

TO WHOM IT MAY CONCERN

This is to certify that an amount of Rs ..62252/-.....(In words) ....SIXTY...TWO...THOUSAND....TWO..HUNDRED..FIFTY..TWO.... has been duly compensated to Shri/Ms ...ZANIVI-O..... for the land and surface damages incurred during the construction of 132kV New-Kohima (Zhadima) to New Secretariat Complex(Nagaland University Campus) Transmission Line under NERPSIP, Nagaland at location no....AP-5..... of Zhadima Village, Kohima district measuring an Area of .....559.5376..... Sq.ft.

(Signature of landowner)

Witness
(i).

(ii).

(Signature of POWERGRID)

भारतीय स्टेट बैंक
State Bank Of India

(09214)-KOHIMA
NEAR DEPUTY COMMISSIONER'S OFFICE
KOHIMA,NAGALAND 797001
Tel : 370 2291310 Fax : 2291409 IFS Code : SBIN0000214 SWIFT :

केवल 3 महीने के लिए वैध / VALID FOR 3 MONTHS ONLY
05 02 2020
D D M M Y Y Y Y

PAY ZANUOVI O KUOTSU को या उनके आदेश पर OR ORDER

रुपये RUPEES Sixty two thousand two hundred-
- fifty two only. अदा करें ₹ 62,252/-

A/C No. 10530522383

VALID UPTO ₹ 50 LACS AT NON-HOME BRANCH

CURRENT A/C
PREFIX :
1515000002

O/O DEPUTY COMMISSIONER

Deputy Commissioner
Kohima, Nagaland

MULTI-CITY CHEQUE Payable at Par at All Branches of SBI

"869580" 799002102: 000563" 29

"4609 / 100 / BLUE ORDER (F) / 14/JUN/2017
SESHAASAI (D) / CTS-2010

ANNEXURE V

Drawing of Bird Guard/ Anti Perching Devises

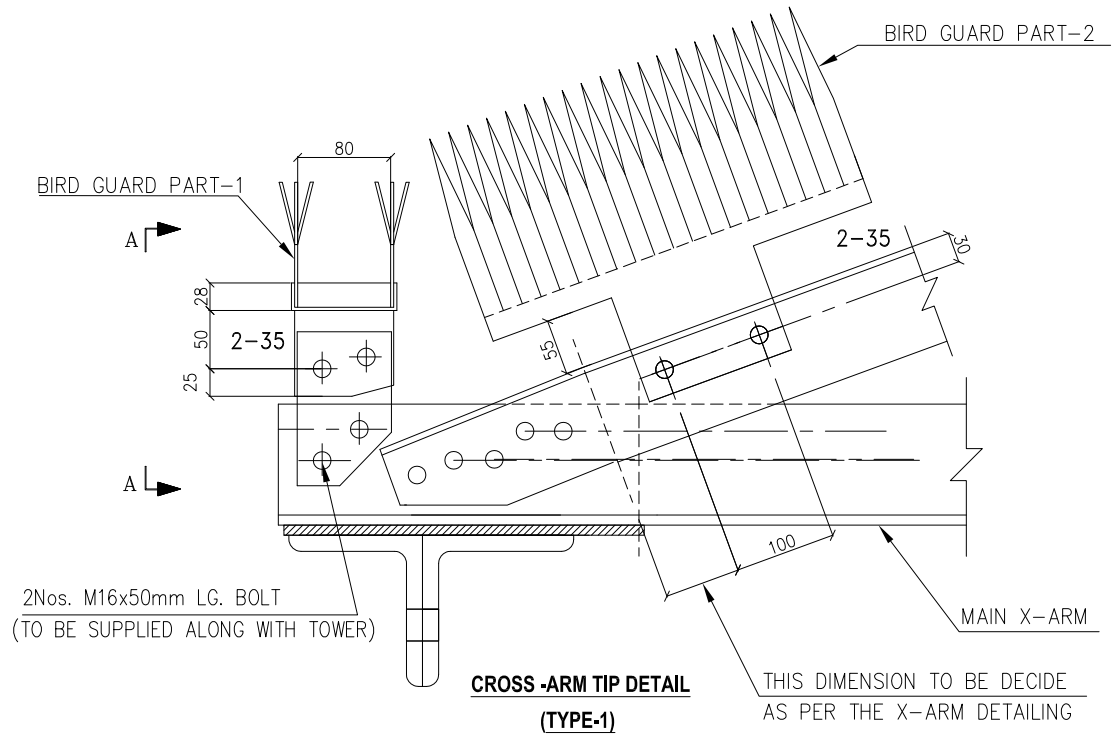

CROSS -ARM TIP DETAIL
(TYPE-1)

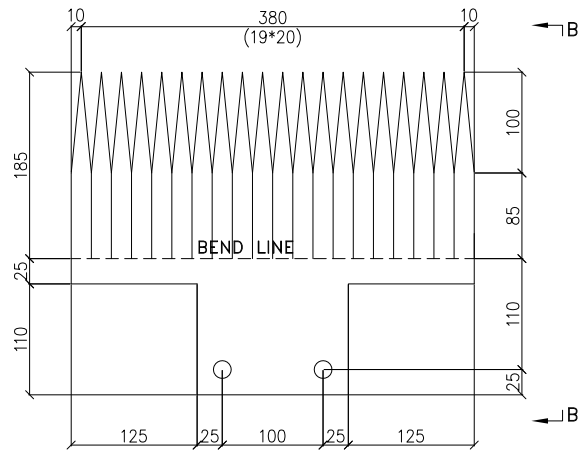

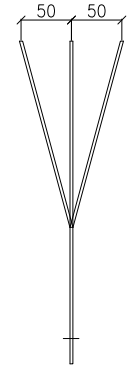

VIEW B-B

④ 320x3THK.-400LG.
QTY: 2 NOS / SETS

BIRD GUARD PART-2

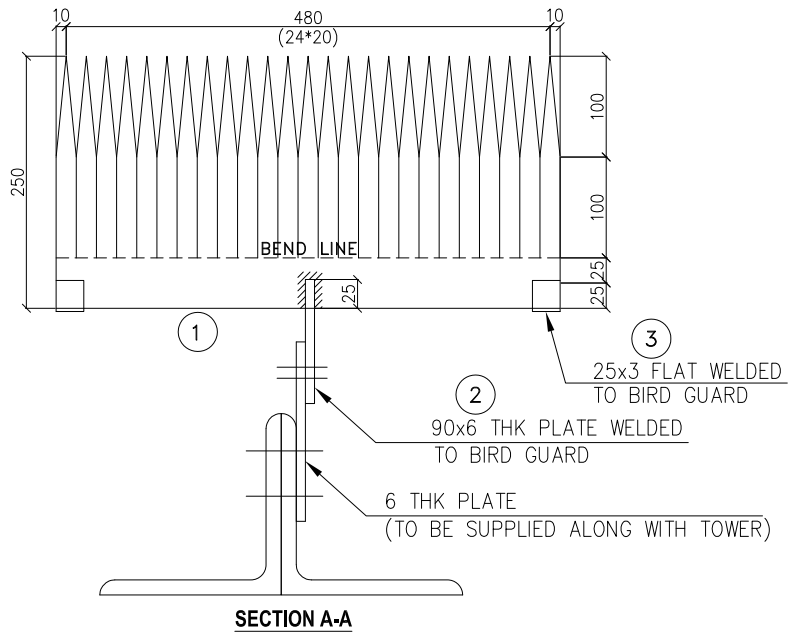

SECTION A-A

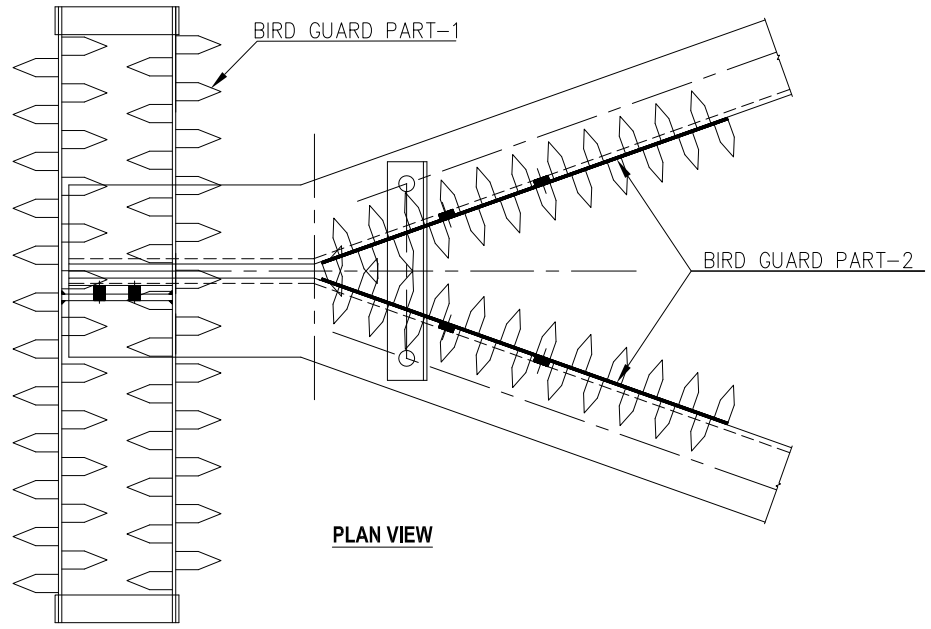

PLAN VIEW

MATERIAL LIST / SETS (TYPE-1)				
NO	DESC.	QTY./ SET	WT/PC (kg)	TOTAL (kg)
1	3 THK 250x500 LG	2	2.944	5.888
2	6 THK 90x103 LG	1	0.437	0.437
3	3 THK 25x140 LG	2	0.082	0.164
4	3MM THK 320x400 LG	2	3.014	6.028
	16ø x35MM Lg B&N	6	0.119	0.714
	16ø 3.5mm SP.Washer	6	0.009	0.054
			GRD. TOTAL=13.285	

NOTES:

1. ALL DIMENSIONS ARE IN MM.
2. GALVANISED AFTER FABRICATION.
3. FIXING ARRANGEMENT TO BE CHECKED WITH TOWER.
4. SUITABLE PROVISION OF CLEAT/PLATE/HOLE TO BE PROVIDED ON SUSPENSION TOWER FACILITING INSTALLATION OF BIRD GUARD AFTER STRINGING.
5. ONE SET OF BIRD GUARD FOR I-STRING (TYPE-1) INCLUDES.
   A) BIRD GUARD PART-1(TYPE-1) = ONE NUMBER
   B) BIRD GUARD PART-2 = TWO NUMBERS
6. HOLE FOR FIXING BG PART-2 TO BE ENSURED ON TOWER MEMBER.
7. 6MM PLATE & 2 Nos. M16x50 Lg. BOLT & NUT TO BE SUPPLIED ALONG WITH TOWER

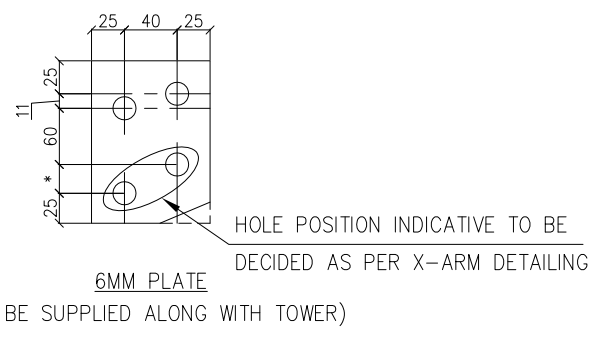

6MM PLATE
(TO BE SUPPLIED ALONG WITH TOWER)

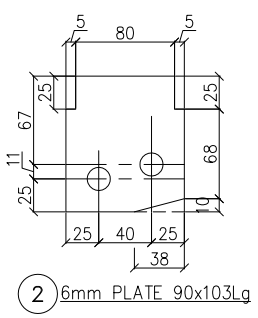

② 6mm PLATE 90x103Lg

POWER GRID CORPORATION OF INDIA LIMITED

TITLE : **DETAILS OF BIRD GUARD FOR I-STRING (TYPE - 1)-REVISED**

DRAWING No. CC:ENGG:TLACC:BG (SHEET 1 of 2)

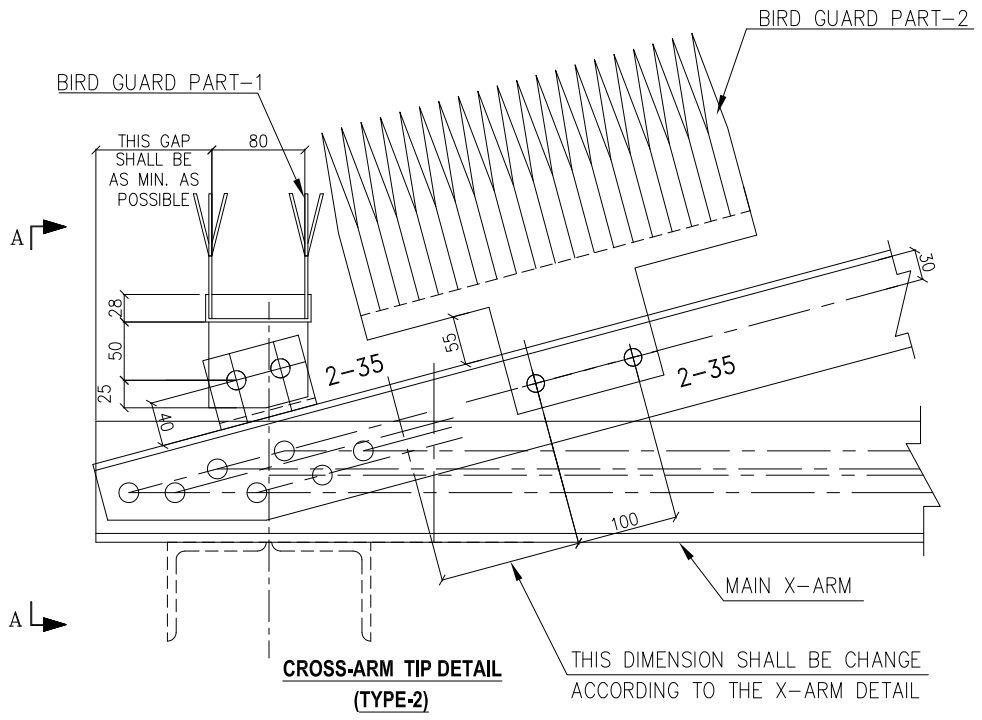

CROSS-ARM TIP DETAIL (TYPE-2)

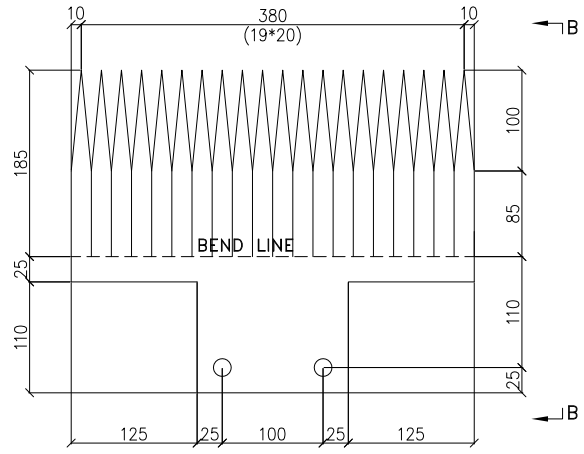

4 — 320x3THK.-400LG.
QTY: 2 NOS / SETS

BIRD GUARD PART-2

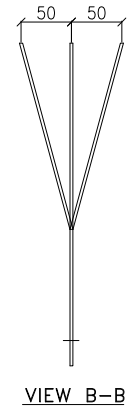

VIEW B-B

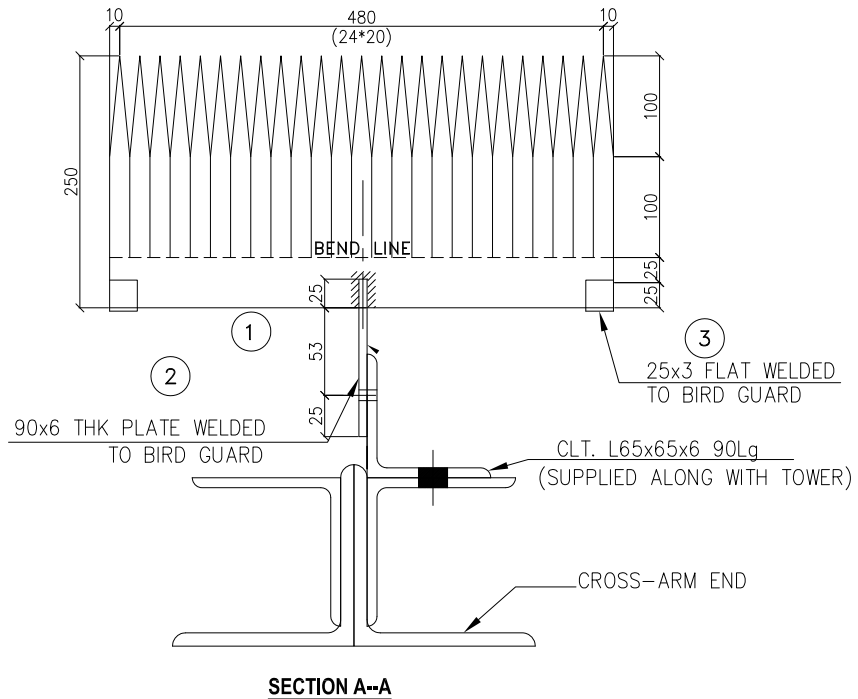

SECTION A--A

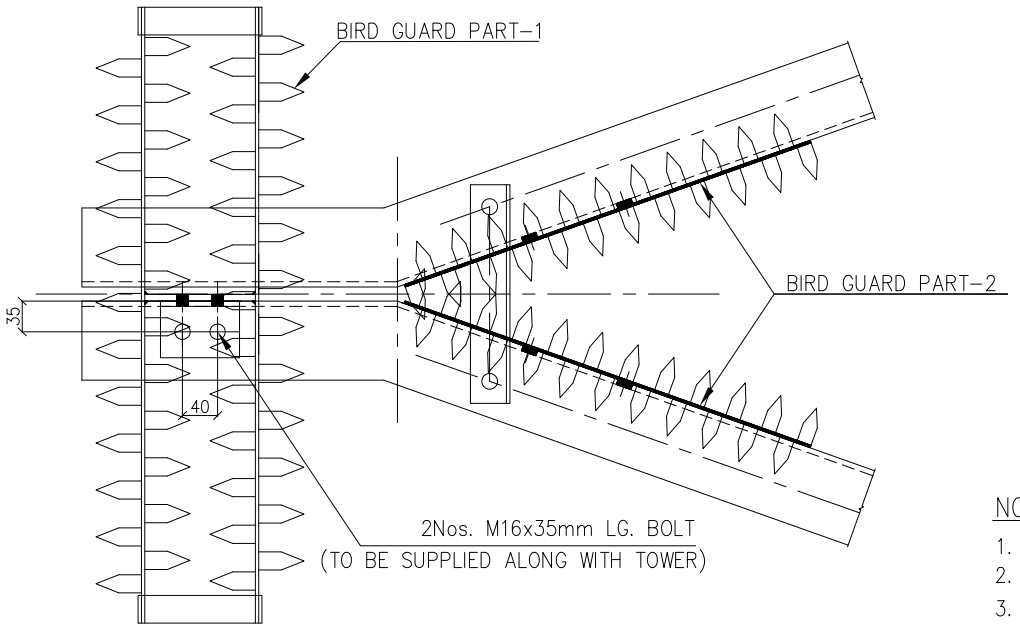

PLAN VIEW

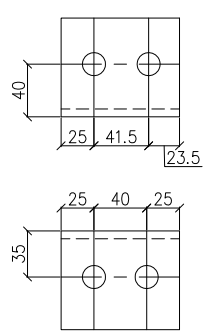

CLT. L65x65x6 90Lg
(TO BE SUPPLIED ALONG WITH TOWER)

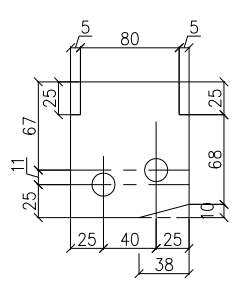

②6mm PLATE 90x103Lg

MATERIAL LIST / SETS (TYPE-2)				
NO	DESC.	QTY./ SET	WT/PC (kg)	TOTAL (kg)
1	3 THK 250x500 LG	2	2.944	5.888
2	6 THK 90x103 LG	1	0.437	0.437
3	3 THK 25x140 LG	2	0.082	0.164
4	3MM THK 320x400 LG	2	3.014	6.028
	16ø x35MM Lg B&N	6	0.119	0.714
	16ø 3.5mm SP.Washer	6	0.009	0.054
			GRD. TOTAL=	13.285

NOTES:

1. ALL DIMENSIONS ARE IN MM.
2. GALVANISED AFTER FABRICATION.
3. FIXING ARRANGEMENT TO BE CHECKED WITH TOWER.
4. SUITABLE PROVISION OF CLEAT/PLATE/HOLE TO BE PROVIDED ON SUSPENSION TOWER FACILITING INSTALLATION OF BIRD GUARD AFTER STRINGING.
5. ONE SET OF BIRD GUARD FOR I-STRING (TYPE-2) INCLUDES.
   A) BIRD GUARD PART-1(TYPE-2) = ONE NUMBER
   B) BIRD GUARD PART-2 = TWO NUMBERS
6. HOLE FOR FIXING BG PART-2 TO BE ENSURED ON TOWER MEMBER
7. L65x65x6-90Lg. & 2 Nos. M16x35 Lg. BOLT & NUT TO BE SUPPLIED ALONG WITH TOWER

POWER GRID CORPORATION OF INDIA LIMITED

TITLE :

DETAILS OF BIRD GUARD FOR I-STRING (TYPE - 2)-REVISED

DRAWING No. CC:ENGG:TLACC:BG (SHEET 2 of 2)

ANNEXURE VI

Signed Copy of Safety Plan Submitted by Contractor

TECHNO POWER ENTERPRISES (P) LTD

(ELECTRICAL ENGINEERS & CONTRACTORS)

CORPORATE & CORRESPONDENCE OFFICE :
INFINITY THINK TANK, TOWER - II
10TH FLOOR, PLOT - A3, BLOCK - GP, SECTOR - V
SALT LAKE CITY, KOLKATA - 700 091, INDIA
PHONE : 033 4063 6169, 4064 5703 / 5704
Website : www.rausheenagroup.com
CIN : U45309NL2000PTC006046

MOLLU VILLA, NEPALI BASTI
P. O. : DIMAPUR - 797 112
NAGALAND
PHONE : 234186
E-mail : tpepl@ymail.com

Our Ref:- TPEPL/PGCIL-NAG-DMS-01&02/SITE-18009 Dt.26./11./2019

The Chief General Manager (NERPSIP)
Power Grid Corporation of India Ltd.
Kohima- 797001/Nagaland/Mob#9435567082
Kind. Attn. Mr.L.A.Sharma.

Sub: Submission of Safety Plan.

Package:- NAG-DMS-02
NOA NO. CC-CS/92-NER/REW-3661/1/G5/NOA-I/7596Dt.11.01.2018.(Supply of Goods)
CC-CS/92-NER/REW-3667/1/G5/NOA-II/7697Dt.11.01.2018(Supply of Services)

Dear Sir,

With reference to above we are submitting herewith the following document related to Environment & Health and Safety plan:

1) Safety Plan dt. 14.8.2018 on stamp paper for NAG-DMS-02 Pkg

Thanking you

Yours faithfully
For Techno Power Enterprises Pvt. Ltd.

Nitish .C.Hazra
Vice President

TECHNO POWER ENTERPRISE (P) LTD. SIKKIM

Table of contents

SL.No.	Contents	Page
1	Safety Plan	1 – 13
2	Safe Work Procedures	14 – 39
3	Manpower Deployment Plan	40
4	List of Lifting Machine & other T & P for Erection	41
5	List of Personal Protective Equipment's & test report	42 – 45
6	List of Earthing Equipment's	46
7	List of qualified Safety officer	47 – 48
8	Environment, Health and Safety Policy	49
9	On Site Emergency Plan	50 – 58
10	Safety Check List	59 – 72
11	Safety Training Module	73 – 74
12	Safety TBT Training Record	75 –
13	Policy Schedule for Employees compensation Insurance	75 – 77
14	Labour Licence	78 – 80
15	ERECTION ALL RISK POLICY, (INCLUDING THIRD PARTY LIABILITIES, MARINE CARO INSURANE, WORKMEN COMPESATION POLICY & BOCW	81 – 95

पश्चिमबङ्ग पश्चिम बंगाल WEST BENGAL AA 601605

SAFETY PLAN

THIS SAFETY PLAN is made this 14 th day of August. 2018 by Joint Venture (JV) of M/s Techno Power Enterprises private Ltd, Kolkata (the lead partner) of JV), a company incorporated under the law of Companies Act, 1956 having its Principal place of business and Registered Office at Infinity think tank..., Tower-II, 10th Floor, Sector V, Salt lake City, Kolkata-700091 and M/s Rausheena Udyog Limited, Guwahati (the other Partner of JV), a company incorporated under the law of Companies Act, 1956 having its Principal place of business and Registered Office at TN Road, Guwahati-01, (hereinafter called as 'Contractor' which expression shall include its successors and permitted assign) for approval of Power Grid Corporation of India Limited, a company incorporated under the Companies Act, 1956 having its Registered Office at ,B-9, Qutab Institutional area, Katwari, New delhi-110016 and its Corporate Office at Saudamani, Plot No.2, 'Sector-29, Gurgaon(Haryana)-122001 for its Contract for Package DMS-2 for Nagaland Associated with NER Power System Improvement Project Specification No.CC-CS/92-NER/REW-3661/1/G5 WHREAS Power Grid Corporation of India Ltd.(PGCIL) has awarded to the contractor the aforesaid Contract vide its Notification of Award/Contract No. CC-CS/92-NER/REW/3661/1/G5/NOA-II/7597 dt.11.01.2018(here in after called the Contract) in terms of which the Contractor is required to submit 'Safety Plan' along with certain documents to the Engineer In-Charge/Project Manager of the Employer within Sixty (60) days of Notification of Award for its approval.

NOW THEREFORE, the Contractor undertakes to execute the Contract as per the safety plan as follows:

1. THAT the Contractor shall execute the works as per provisions of Bidding Documents including those in regard to Safety Precautions / provisions as per statutory requirements.

2. THAT the Contractor shall execute the works in a well planned manner from the commencement of Contract as per agreed mile stones of work completion

Techno Power Enterprises Pvt. Ltd. Kolkata

TECHNO POWER ENTERPRISE Date

schedule so that planning and execution of construction works goes smoothly and consistently through out the contract duration without handling pressure in last quarter of the financial year/last months of the Contract and the shall be finalized in association with EMPLOYER Engineer In-charge/Project Manager from time to time as required.

3. THAT the Contractor has prepared the safe work procedure for each activity i.e. foundation works including civil works, erection, stringing (as applicable), testing & commissioning, disposal of materials at site / store etc. to be executed at site, which is enclosed at **Annexure – 1A (SP)** for acceptance and approval of Engineer In-charge/Project Manager. The Contractor shall ensure that on approval of the same from Engineer In-charge/Project Manager , the approved copies will be circulated to Employer's personnel at site [Supervisor(s)/Executive(s)] and Contractor's personnel at site [Gang leader, supervisor(s) etc.] in their local language / language understood by gang.

   THAT the Contractor has prepared minimum manpower deployment plan, activity wise as stated above, which is enclosed at **Annexure – 1B (SP)** for approval of Engineer In-charge/Project Manager.

4. THAT the Contractor shall ensure while executing works that they will deploy minimum 25% of their own experienced work force who are on the permanent roll of the company and balance 75% can be a suitable mixed with the hired gangs / local workers / casual workers if required. The above balance 75% work force should be provided with at least 10 days training by the construction agencies at sites and shall be issued with a certificate. No worker shall be engaged without a valid certificate. Hired gang workers shall also follow safe working procedures and safety norms as is being followed by company's workmen. It should also be ensured by the contractor that certified fitters who are climbing towers / doing stringing operations can be easily identifiable with a system like issue of Badge / Identification cards (ID cards) etc. Colour identification batches should be worn by the workers. Contractor has to ensure that inexperience workers / unskilled workers should not be deployed for skilled job.

5. THAT the Contractor's Gang leader / Supervisor / Senior most member available at every construction site shall brief to each worker daily before start of work about safety requirement and warn about imminent dangers and precautions to be taken against the imminent dangers (Daily Safety Drill). This is to be ensured without fail by Contractor and maintain record of each gang about daily safety instructions issued to workers and put up to EMPLOYER site In-charge for his review and record.

6. THAT the Contractor shall ensure that working Gangs at site should not be left at the discretion of their Gang Leaders who are generally hired and having little knowledge about safety. Gang leader should be experienced and well versed with the safe working procedures applicable for transmission line/ Sub Station works. In case gang is having Gang leader not on permanent roll of the company then additional Supervisor from company's own roll having thorough knowledge about the works would be deployed so as to percolate safety instructions up to the grass root level in healthy spirits. Contractor has to ensure close supervision while executing critical locations of transmission lines / sub stations and ensures that all safety instructions are in place and are being followed.

7. THAT the Contractor shall maintain in healthy and working condition all kind of Equipments / Machineries / Lifting tools / Lifting tackles / Lifting gears / All kind of Ropes including wire ropes / Polypropylene ropes etc. used for Lifting purpose during execution of the project and get them periodically examined and load tested for safe working load in accordance with relevant provisions and requirement of Building & other construction workers Regulation of Employment and Conditions of Services Act and Central Rule 1998, Factories Act 1948, Indian Electricity Act 2003 before start of the project. A register of such examinations and tests shall be properly maintained by the contractor and will be promptly produced as and

when desired by the Engineer In-charge/Project Manager or by the person authorised by him. The Contractor has to ensure to give special attention on the formation / condition of eye splices of wire rope slings as per requirement of IS 2762 Specification for wire rope slings and sling legs.

THAT the Contractor has prepared a list of all Lifting machines, lifting Tools / Lifting Tackles / Lifting Gears etc. / All types of ropes and Slings which are subject to safe working load is enclosed at **Annexure – 2 (SP)** for review and approval of Engineer In-charge/Project Manager.

8. THAT the Contractor has to procure sufficient quantity of Personal Protective Equipment (PPE)conforming to Indian / International standards and provide these equipment to every workman at site as per need and to the satisfaction of Engineer-in-charge/Project Manager of EMPLOYER. The Contractor's Site Supervisor/ Project Manager has to ensure that all workmen must use Personal Protective Equipment at site. The Contractor shall also ensure that Industrial Safety helmets are being used by all workmen at site irrespective of their working (at height or on ground). The Contractor shall further ensure use of safety shoes by all ground level workers and canvas shoes for all workers working at height, Rubber Gum Boots for workers working in rainy season and concreting job, Use of Twin Lanyard Full body Safety Harness with attachment of light weight such as aluminium alloy etc. and having features of automatic locking arrangement of snap hook, by all workers working at height for more than three meters and also for horizontal movement on tower shall be ensured by contractor. The Contractor shall not use ordinary half body safety harness at site. The Contractor has to ensure use of Retractable type fall arrestors by workers for ascending / descending on suspension insulator string and other similar works etc., Use of Mobile fall arrestor for ascending / descending from tower by all workers. The contractor has to provide cotton / leather hand gloves as per requirement, Electrical Resistance Hand gloves for operating electrical installations / switches, Face shield for protecting eyes while doing welding works and Dust masks to workers as per requirement. The Contractor will have to take action against the workers not using Personal Protective Equipment at site and those workers shall be asked to rest for that day and also their Salary be deducted for that day. EMPLOYER may issue warning letter to Project Manager of contractor in violation of above norms.

THAT the Contractor shall prepare a detailed list of PPEs, activity wise, to commensurate with manpower deployed, which is enclosed at **Annexure – 3 (SP)** for review and approval of Engineer In-charge/Project Manager. It shall also be ensured that the sample of these equipment shall be got approved from EMPLOYER supervisory staff before being distributed to workers. The contractor shall submit relevant test certificates as per IS / International Standard as applicable to PPEs used during execution of work. All the PPE's to be distributed to the workers shall be checked by EMPLOYER supervisory staff before its usage.

The Contractor also agrees for addition / modification to the list of PPE, if any, as advised by Engineer In-Charge/Project Manager.

9. THAT the Contractor shall procure, if required sufficient quantity of Earthing Equipment / Earthing Devices complying with requirements of relevant IEC standards (Generally IECs standards for Earthing Equipments / Earthing Devices are – 855, 1230, 1235 etc.) and to the satisfaction of Engineer In-Charge/ Project Manager and contractor to ensures to maintained them in healthy condition.

THAT the Contractor has prepared / worked out minimum number of healthy Earthing Equipments with Earthing lead confirming to relevant IS / European standards per gang wise during stringing activity/as per requirement, which is enclosed herewith at **Annexure**

– 4 (SP) for review and acceptance of Engineer In-Charge/ Project Manager prior toexecution of work.

10. THAT the Contractor shall provide communication facilities i.e. Walky – Talkie / Mobile Phone, Display of Flags / whistles for easy communication among workers during Tower erection / stringing activity, as per requirement.

11. THAT the Contractor undertakes to deploy qualified safety personnel responsible for safety as per requirements of Employer/Statutory Authorities.

THAT the Contractor employing more than 250 workmen whether temporary, casual, probationer, regular or permanent or on contract, shall employ at least one full time officer exclusively as qualified safety officer having diploma in safety to supervise safety aspects of the equipment and workmen who will coordinate with Engineer In-charge /Project Manager/Safety Coordinator of the Employer. In case of work being carried out through sub contractors the sub – contractor's workmen / employees will also be considered as the contractor's employees / workmen for the above purpose. If the number of workers are less than 250 then one qualified safety officer is to be deployed for each contract. He will report directly to his head of organization and not the Project Manager of contractor He shall also not be assigned any other work except assigning the work of safety. The curriculum vitae of such person shall be got cleared from EMPLOYER Project Manager / Construction staff.

The name and address of such safety officers of contractor will be promptly informed in writing to Engineer In-charge with a copy to safety officer - In-charge before start of work or immediately after any change of the incumbent is made during the currency of the contract. The list is enclosed at **Annexure – 5A (SP)**.

THAT the Contractor has also prepared a list including details of Explosive Operator (if required), Safety officer / Safety supervisor / nominated person for safety for each erection / stringing gang, list of personnel trained in First Aid Techniques as well as copy of organisation structure of the Contractor in regard to safety. The list is enclosed at **Annexure – 5B (SP)**.

12. The Project Manager shall have the right at his sole discretion to stop the work, if in his opinion the work is being carried out in such a way that it may cause accidents and endanger the safety of the persons and/or property, and/or equipment. In such cases, the Contractor shall be informed in writing about the nature of hazards and possible injury/accident and he shall comply to remove shortcomings promptly. The Contractor after stopping the specific work can, if felt necessary, appeal against the order of stoppage of work to the Project Manager within 3 days of such stoppage of work and decision of the Project Manager in this respect shall be conclusive and binding on the Contractor.

13. THAT, if, any Employer's Engineer/ supervisor at site observes that the Contractor is failing to provide safe working environment at site as per agreed Safety Plan / EMPLOYER Safety Rule/ Safety Instructions / Statutory safety requirement and creates hazardous conditions at site and there is possibility of an accident to workmen or workmen of the other contractor or public or the work is being carried out in an un safe manner or he continues to work even after being instructed to stop the work by Engineer / Supervisor at site / RHQ / Corp. Centre, the Contractor shall be bound to pay a penalty of Rs. 10,000/ - per incident per day till the instructions are complied and as certified by Engineer / Supervisor of Employer at site. The work will remain suspended and no activity will take place without compliance and obtaining clearance / certification of the Site Engineer / Supervisor of the Employer to start the work.

14. THAT, if the investigation committee of Employer observes any accident or the Engineer In-charge/Project Manager of the Employer based on the report of the Engineer/Supervisor of the Employer at site observes any failure on the Contractor's part
to comply with safety requirement / safety rules/ safety standards/ safety instruction as prescribed by the Employer or as prescribed under the applicable law for the safety of the equipment, plant and personnel and the Contractor does not take adequate steps to prevent hazardous conditions which may cause injury to its own Contractor's employees or employee of any other Contractors or Employer or any other person at site or adjacent thereto, or public involvement because of the Contractor's negligence of safety norms, the Contractor shall be liable to pay a compensation of Rs. 10,00,000/- (Rupees Ten Lakh only) per person affected causing death and Rs. 1,00,000/- (Rupees One Lakh only) per person for serious injuries / 25% or more permanent disability to the Employer for further disbursement to the deceased family/ Injured persons. The permanent disability has the same meaning as indicated in Workmen's Compensation Act 1923. The above stipulations is in addition to all other compensation payable to sufferer as per workmen compensation Act / Rules

THAT as per the Employer's instructions, the Contractor agrees that this amount shall be deducted from their running bill(s) immediately after the accident, That the Contractor understands that this amount shall be over and above the compensation amount liable to be paid as per the Workmen's Compensation Act /other statutory requirement/ provisions of the Bidding Documents.

15. THAT the Contractor shall submit Near-Miss-Accident report along with action plan for avoidance such incidence /accidents to Engineer – In-charge/ Project Manager. Contractor shall also submit Monthly Safety Activities report to Engineer – In-charge/ Project Manager and copy of the Monthly Safety Activities report also to be sent to Safety In-charge at RHQ of the Employer for his review record and instructions.

16. THAT the Contractor is submitting a copy of Safety Policy/ Safety Documents of its Company which is enclosed at **Annexure – 6 (SP)** and ensure that the safety Policy and safety documents are implemented in healthy spirit.

17. THAT the Contractor shall make available of First Aid Box [Contents of which shall be as per Building & other construction workers (Regulation of Employment and Conditions of Services Act and Central Rule 1998 / EMPLOYER Guidelines)] to the satisfaction of Engineer In-Charge/ Project Manager with each gang at site and not at camp and ensures that trained persons in First Aid Techniques with each gang before execution of work.

18. THAT the Contractor shall submit an 'Emergency Preparedness Plan' for different incidences i.e. Fall from height, Electrocution, Sun Stroke, Collapse of pit, Collapse of Tower, Snake bite, Fire in camp / Store, Flood, Storm, Earthquake, Militancy etc. while carrying out different activities under execution i.e. foundation works including civil works, erection, stringing (as applicable), testing & commissioning, disposal of materials at site / store etc. which is enclosed at **Annexure – 7 (SP)** for approval of the Engineer In-Charge/ Project Manager before start of work.

19. THAT the Contractor shall organise Safety Training Programs on Safety, Health and Environment and for safe execution of different activities of works i.e. foundation works including civil works, erection, stringing (as applicable), testing & commissioning, disposal of materials at site / store etc. for their own employees including sub contractor workers on regular basis.

The Contractor, therefore, submits copy of the module of training program, enclosed at **Annexure – 9 (SP)**, to Engineer In-charge/Project Manager for its acceptance andapproval and records maintained.

20. THAT the Contractor shall conduct safety audit, as per Safety Audit Check Lists enclosed at **Annexure – 8 (SP)**, by his Safety Officer(s) every month during construction of Transmission Lines / Sub Stations / any other work and copy of the safety audit report will be forwarded to the Employer's Engineer In-charge / Site In-charge/Project Manager for his comments and feedback. During safety audit, healthiness of all Personal Protective Equipments (PPEs) shall be checked individually by safety officer of contractor and issue a certificate of its healthiness or rejection of faulty PPEs and contractor has to ensure that all faulty PPEs and all faulty lifting tools and tackles should be destroyed in the presence of EMPLOYER construction staff. Contractor has to ensure that each gang be safety audited at least once in two months. During safety audit by the contractor, Safety officer's feedback from EMPLOYER concerned shall be taken and recorded. The Employer's site officials shall also conduct safety audit at their own from time to time when construction activities are under progress. Apart from above, the Employer may also conduct surveillance safety audits. The Employer may take action against the person / persons as deemed fit under various statutory acts/provisions under the Contract for any violation of safety norms / safety standards.

21. THAT the Contractor shall develop and display Safety Posters of construction activity at site and also at camp where workers are generally residing.

22. THAT the Contractor shall ensure to provide potable and safe drinking water for workers at site / at camp.

23. THAT the Contractor shall do health check up of all workers from competent agencies and reports will be submitted to Engineer In-Charge within fifteen (15) days of health check up of workers as per statutory requirement.

24. THAT the Contractor shall submit information along with documentary evidences in regard to compliance to various statutory requirements as applicable which are enclosed at **Annexure – 10A (SP)**.

    The Contractor shall also submit details of Insurance Policies taken by the Contractor for insurance coverage against accident for all employees are enclosed at **Annexure – 10B(SP)**.

25. THAT a check-list in respect of aforesaid enclosures along with the Contractor's remarks, wherever required, is attached as **Annexure – Check List** herewith.

THE CONTRACTOR shall incorporate modifications/changes in this 'Safety Plan' necessitated on the basis of review/comments of the Engineer In-Charge/Project Manager within fourteen (14) days of receipt of review/comments and on final approval of the Engineer In-Charge/Project Manager of this 'Safety Plan', the Contractor shall execute the works under the Contract as per approved 'Safety Plan'. Further, the Contractor has also noted that the first progressive payment towards Services Contract shall be made on submission of 'Safety Plan' along with all requisite documents and approval of the same by the Engineer In-Charge/Project Manager.

IN WITNESS WHEREOF, the Contractor has hereunto set its hand through its authorised representative under the common seal of the Company, the day, month and year first above mentioned.

For and on behalf of

M/s. TECHNO POWER ENTERPRISES PVT. LTD.

WITNESS

1. Signature. Kalyanasis Choudhury

   Name. KALYANASIS CHAUDHURY

   Address. Sec-V, Salt Lake City, Kol-91

Signature.

Name. NITISH CHAKRABORTY

Address. Infinity Think Tank Tower-II, 10th Floor, Block-GP, Sector-V, Salt Lake City, Kolkata-700091

2. Signature. Mamata Dandapat

Name. MAMATA DANDAPAT

Address. Infinity Think Tank, Tower II, salt lake city, kol-91

Authorised representative

(Common Seal)

(In case of Company)

Note:

All the annexure referred to in this "Safety Plan" are required to be enclosed by the contractor as per the attached "Check List "

1. Safety Plan is to be executed by the authorised person and (i) in case of contracting Company under common seal of the Company or (ii) having the power of attorney issued under common seal of the company with authority to execute such contract documents etc., (iii) In case of (ii), the original Power of Attorney if it is specifically for this Contract or a Photostat copy of the Power of Attorney if it is General Power of Attorney and such documents should be attached to this Safety Plan.

2. For all safety monitoring/ documentation, Engineer In-charge / Regional In-charge of safety at RHQ will be the nodal Officers for communication.

CHECK LIST FOR SEFETY PLAN

S. N.	Details of Enclosure	Status of Submission of information/ documents	Remarks
1.	**Annexure – 1A (SP)** Safe work procedure for each activity i.e. foundation works including civil works, erection, stringing (as applicable), testing & commissioning, disposal of materials at site / store etc. to be executed at site.	Yes/No	Yes
2.	**Annexure – 1B (SP)** Manpower deployment plan, activity wise foundation works including civil works, erection, stringing (as applicable), testing & commissioning, disposal of materials at site / store etc.	Yes/No	Yes
3.	**Annexure – 2 (SP)** List of Lifting Machines i.e. Crane, Hoist, Triffor, Chain Pulley Blocks etc. and Lifting Tools and Tackles i.e. D shackle, Pulleys, come along clamps, wire rope slings etc. and all types of ropes i.e. Wire ropes, Poly propylene Rope etc. used for lifting purposes along with test certificates.	Yes/No	Yes
4.	**Annexure – 3 (SP)** List of Personal Protective Equipment (PPE), activity wise including the following along with test certificate of each as applicable: 1. Industrial Safety Helmet to all workmen at site. (EN 397 / IS 2925) with chin strap and back stay arrangement. 2. Safety shoes without steel toe to all ground level workers and canvas shoes for workers working on tower. 3. Rubber Gum Boot to workers working in rainy season / concreting job. 4. Twin lanyard Full Body Safety harness with shock absorber and leg strap arrangement for all workers working at height for more than three meters. Safety Harness should be	Yes/No	Yes

TECHNO POWER ENTERPRISE (P) LTD.

S. N.	Details of Enclosure	Status of Submission of information/ documents	Remarks
	with attachments of light weight such as of aluminium alloy etc. and having a feature of automatic locking arrangement of snap hook and comply with EN 361 / IS 3521 standards. 5. Mobile fall arrestors for safety of workers during their ascending / descending from tower / on tower. EN 353 -2 (Guided type fall arresters on a flexible anchorage line.) 6. Retractable type fall arrestor (EN360: 2002) for ascending / descending on suspension insulator string etc. 7. Providing of good quality cotton hand gloves / leather hand gloves for workers engaged in handling of tower parts or as per requirement at site. 8. Electrical Resistance hand gloves to workers for handling electrical equipment / Electrical connections. IS : 4770 9. Dust masks to workers handling cement as per requirement. 10. Face shield for welder and Grinders. IS : 1179 / IS : 2553 11. Other PPEs, if any, as per requirement etc.		
5.	**Annexure – 4 (SP)** List of Earthing Equipment / Earthing devices with Earthing lead conforming to IECs for earthing equipments are – (855, 1230, 1235 etc.) gang wise for stringing activity/as per requirement	Yes/No	Yes
6.	**Annexure – 5A (SP)** List of Qualified Safety Officer(s) along with their contact details	Yes/No	Yes
7.	**Annexure – 5B (SP)** Details of Explosive Operator (if required), Safety officer / Safety supervisor for every erection / stinging gang, any other person nominated for safety, list of personnel trained in First Aid as well as brief information about safety set up by the Contractor alongwith copy of organisation of the Contractor in regard to safety	Yes/No	
8.	**Annexure – 6 (SP)**		

TWO POWER ENTERPRISE (P) LTD.

9

S. N.	Details of Enclosure	Status of Submission of information/ documents	Remarks
	Copy of Safety Policy/ Safety Document of the Contractor's company	Yes/No	Yes
9.	**Annexure – 7 (SP)** 'Emergency Preparedness Plan' for different incidences i.e. Fall from height, Electrocution, Sun Stroke, Collapse of pit, Collapse of Tower, Snake bite, Fire in camp / Store, Flood, Storm, Earthquake, Militancy etc. while carrying out different activities under execution i.e. foundation works including civil works, erection, stringing (as applicable), testing & commissioning, disposal of materials at site / store etc.	Yes/No	Yes
10.	**Annexure – 8 (SP)** Safety Audit Check Lists (Formats to be enclosed)	Yes/No	Yes
11.	**Annexure – 9 (SP)** Copy of the module of Safety Training Programs on Safety, Health and Environment, safe execution of different activities of works for Contractor's own employees on regular basis and sub contractor employees.	Yes/No	Yes
12.	**Annexure – 10A (SP)** Information along with documentary evidences in regard to the Contractor's compliance to various statutory requirements including the following:		
(i)	Electricity Act 2003 _____ [*Name of Documentary evidence in support of compliance*]	Yes/No	Yes
(ii)	Factories Act 1948 _____ [*Name of Documentary evidence in support of compliance*]	Yes/No	Yes
(iii)	Building & other construction workers (Regulation	Yes/No	Yes

S. N.	Details of Enclosure	Status of Submission of Information/ documents	Remarks
	of Employment and Conditions of Services Act and Central Act 1996) and Welfare Cess Act 1996 with Rules. _____ [*Name of Documentary evidence in support of compliance*]		
(iv)	Workmen Compensation Act 1923 and Rules. _____ [*Name of Documentary evidence in support of compliance*]	Yes/No	Yes
(v)	Public Insurance Liabilities Act 1991 and Rules. _____ [*Name of Documentary evidence in support of compliance*]	Yes/No	Yes
(vi)	Indian Explosive Act 1948 and Rules. _____ [*Name of Documentary evidence in support of compliance*]	Yes/No	Yes
(vii)	Indian Petroleum Act 1934 and Rules. _____ [*Name of Documentary evidence in support of compliance*]	Yes/No	Yes
(viii)	License under the contract Labour (Regulation & Abolition) Act 1970 and Rules. _____ [*Name of Documentary evidence in support of compliance*]	Yes/No	Yes
(ix)	Indian Electricity Rule 1956 and amendments if any, from time to time. _____ [*Name of Documentary evidence in support of compliance*]	Yes/No	Yes
(x)	The Environment (Protection) Act 1986 and Rules.	Yes/No	Yes

S. N.	Details of Enclosure	Status of Submission of information/ documents	Remarks
	_____ [*Name of Documentary evidence in support of compliance*]		
(xi)	Child Labour (Prohibition & Regulation) Act 1986. _____ [*Name of Documentary evidence in support of compliance*]	Yes/No	Yes
(xii)	National Building Code of India 2005 (NBC 2005). _____ [*Name of Documentary evidence in support of compliance*]	Yes/No	Yes
(xiii)	Indian standards for construction of Low/ Medium/ High/ Extra High Voltage Transmission Line _____ [*Name of Documentary evidence in support of compliance*]	Yes/No	Yes
(iv)	Any other statutory requirement(s) [*please specify*] _____ [*Name of Documentary evidence in support of compliance*]	Yes/No	Yes
13.	**Annexure – 10B (SP)** Details of Insurance Policies alongwith documentary evidences taken by the Contractor for the insurance coverage against accident for all employees as below:		
(i)	Under Workmen Compensation Act 1923 and Rules. _____ [*Name of Documentary evidence in support of insurance taken*]	Yes/No	Yes
(ii)	Public Insurance Liabilities Act 1991	Yes/No	Yes

POWER ENTERPRISE (P) LTD. OKHLA

S. N.	Details of Enclosure	Status of Submission of information/ documents	Remarks
	[Name of ~~Documentary evidence in support of~~ insurance ~~taken~~]		
(iii)	Any Other Insurance Policies ~~[Name of Documentary evidence in support of~~ insurance taken]	~~Yes~~/No	Yes.

ANNEXURE VII

Safety/Penalty Provisions in Contract Conditions

PC 21.3.4 **Replace the word *'may'* in line no. 10 with *'is'*.**

Addition of New Clauses (PC21.3.5, PC21.3.6) after GC 21.3.4

PC 21.3.5 **Packing**

The Contractor shall provide such packing of the Goods as it is required to prevent their damage or deterioration during transit to their final destination as indicated in the Contract. The packing shall be sufficient to withstand, without limitation, rough handling during transit and exposure to extreme temperatures, salt and precipitation during transit and open storage. Packing case size and weights shall take into consideration, where appropriate, the remoteness of the Goods final destination and the absence of heavy handling facilities at all points in transit.

PC 21.3.6 The packing, marking and documentation within and outside the packages shall comply strictly with such special requirements as shall be expressly provided for in the Contract and, subject to any subsequent instruction ordered by the Employer consistent with the requirements of the Contract.

PC 21.4 Replace the word **'materials'** in line no. 2 with **'Plant and Equipment'**.

Add the word **'including liabilities for port charges if any'** after the word **'clearance'** in line no. 3.

Addition of Sub-Clauses (PC22.2.3.1, PC22.2.3.2, PC22.2.3.3, PC 22.2.3.4 of GC 22.2.3

PC 22.2.3.1 Compliance with Labour Regulations

During continuance of the contract, the Contractor and his sub-contractors shall abide at all times by all applicable existing labour enactments and rules made thereunder, regulations notifications and byelaws of the State or Central Government or local authority and any other labour law (including rules), regulations bye laws that may be passed or notification that may be issued under any labour law in future either by the State or the Central Government or the local authority. The employees of the Contractor and the Sub-contractor in no case shall be treated as the

employees of the Employer at any point of time.

PC 22.2.3.2 The Contractor shall keep the Employer indemnified in case any action is taken against the Employer by the competent authority on account of contravention of any of the provisions of any Act or rules made thereunder, regulations or notifications including amendments.

PC 22.2.3.3 If the Employer is caused to pay under any law as principal employer such amounts as may be necessary to cause or observe, or for non observance of the provisions stipulated in the notifications/ byelaws/Acts/ Rules/regulations including amendments, if any, on the part of the Contractor, the Employer shall have the right to deduct any money due to the Contractor under this contract or any other contract with the employer including his amount of performance security for adjusting the aforesaid payment. The Employer shall also have right to recover from the Contractor any sum required or estimated to be required for making good the loss or damage suffered by the Employer.

PC 22.2.3.4 Salient features of some major laws applicable to establishments engaged in building and other construction works are indicated at **Appendix-I** to PC.

Addition of New Sub-Clauses (PC22.4.1 to 22.4.3 including its sub-clauses) of GC 22.4

PC 22.4.1 **Protection of Environment**

The Contractor shall take all reasonable steps to protect the environment on and off the Site and to avoid damage or nuisance to persons or to property of the public or others resulting from pollution, noise or other causes arising as consequence of his methods of operation.

During continuance of the Contract, the Contractor and his Sub-contractors shall abide at all times by all existing enactments on environmental protection and rules made there under, regulations, notifications and bye-laws of the State or Central Government, or local authorities and any other law, bye-law, regulations that may be passed or notification that may be issued in this respect in future by the State or Central Government or the local authority.

Salient features of some of the major laws that are applicable are given below:

The Water (Prevention and Control of Pollution) Act, 1974, This provides for the prevention and control of water pollution and the maintaining and restoring of wholesomeness of water. 'Pollution' means such contamination of water or such alteration of the physical, chemical or biological properties of water or such discharge of any sewage or trade effluent or of any other liquid, gaseous or solid substance into water (whether directly or indirectly) as may, or is likely to, create a nuisance or render such water harmful or injurious to public health or safety, or to domestic, commercial, industrial, agricultural or other legitimate uses, or to the life and health of animals or plants or of aquatic organisms.

The Air (Prevention and Control of Pollution) Act, 1981, This provides for prevention, control and abatement of air pollution. 'Air Pollution' means the presence in the atmosphere of any 'air pollutant', which means any solid, liquid or gaseous substance (including noise) present in the atmosphere in such concentration as may be or tend to be injurious to human beings or other living creatures or plants or property or environment.

The Environment (Protection) Act, 1986, This provides for the protection and improvement of environment and for matters connected therewith, and the prevention of hazards to human beings, other living creatures, plants and property. 'Environment' includes water, air and land and the inter-relationship which exists among and between water, air and land, and human beings, other living creatures, plants, micro-organism and property.

The Public Liability Insurance Act, 1991, This provides for public liability insurance for the purpose of providing immediate relief to the persons affected by accident occurring while handling hazardous substances and for matters connected herewith or incidental thereto. Hazardous substance means any substance or preparation which is defined as hazardous substance under Environment (Protection) Act, 1986, and exceeding such quantity as may be specified by notification by the Central Government.

PC 22.4.2 (i) The Contractor shall (a) establish an operational system of managing environmental impacts, (b) carry out all the monitoring and mitigation measures set forth in the environment management plan attached to the Particular Conditions as **Appendix-II**, and (c) allocate the budget required to ensure that such measures are carried out. The

Contractor shall submit to the Employer (quarterly) semi-annual) reports on the carrying out of such measures.

(ii) The Contractor shall adequately record the conditions of roads, agricultural land and other infrastructure prior to transport of material and construction commencement, and shall fully reinstate road / pathways, other local infrastructure and agricultural land to atleast their pre-project condition upon construction completion.

(iii) The Contractor shall undertake detailed survey of the affected persons during transmission line alignment finalization under the Project, where applicable. and

(iv) The Contractor shall conduct health and safety programme for workers employed under the Contract and shall include information on the risk of sexually transmitted diseases, including HIV/AIDS in such programs.

PC 22.4.3 Safety Precautions

PC 22.4.3.1 The Contractor shall observe all applicable regulations regarding safety on the Site.

Unless otherwise agreed, the Contractor shall, from the commencement of work on Site until taking over, provide:

a) fencing, lighting, guarding and watching of the Works wherever required, and

b) temporary roadways, footways, guards and fences which may be necessary for the accommodation and protection of Employer / his representatives and occupiers of adjacent property, the public and others.

PC 22.4.3.2 The Contractor shall ensure proper safety of all the workmen, materials, plant and equipment belonging to him or to THE EMPLOYER or to others, working at the Site. The Contractor shall also be responsible for provision of all safety notices and safety equipment required both by the relevant legislations and the Engineer, as he may deem necessary.

PC 22.4.3.3 The Contractor will notify well in advance to the Engineer of his intention to bring to the Site any container filled with liquid or gaseous fuel or explosive or petroleum substance or such chemicals which may involve hazards. The Engineer shall have the right to prescribe the conditions, under which such container is to be stored, handled and used during the performance of the works and the Contractor shall strictly adhere to and comply with such instructions. The Engineer shall have the right at his sole discretion to inspect any such container or such construction plant/equipment for which material in the container is required to be used and if in his opinion, its use is not safe, he may forbid its use. No claim due to such prohibition shall be entertained by the Owner and the Owner shall not entertain any claim of the Contractor towards additional safety provisions/conditions to be provided for/constructed as per the Engineer's instructions.

Further, any such decision of the Engineer shall not, in any way, absolve the Contractor of his responsibilities and in case, use of such a container or entry thereof into the Site area is forbidden by the Engineer, the Contractor shall use alternative methods with the approval of the Engineer without any cost implication to THE EMPLOYER or extension of work schedule.

PC 22.4.3.4 Where it is necessary to provide and/or store petroleum products or petroleum mixtures and explosives, the Contractor shall be responsible for carrying-out such provision and/or storage in accordance with the rules and regulations laid down in Petroleum Act 1934, Explosives Act, 1948 and Petroleum and Carbide of Calcium Manual published by the Chief Inspector of Explosives of India. All such storage shall have prior approval of the Engineer. In case, any approvals are necessary from the Chief Inspector (Explosives) or any statutory authorities, the Contractor shall be responsible for obtaining the same.

PC 22.4.3.5 All equipment used in construction and erection by Contractor shall meet Indian/International Standards and where such standards do not exist, the Contractor shall

ensure these to be absolutely safe. All equipment shall be strictly operated and maintained by the Contractor in accordance with manufacturer's Operation Manual and safety instructions and as per Guidelines/rules of THE EMPLOYER in this regard.

PC 22.4.3.6 Periodical examinations and all tests for all lifting/hoisting equipment & tackles shall be carried-out in accordance with the relevant provisions of Factories Act 1948, Indian Electricity Act 1910 and associated Laws/Rules in force from time to time. A register of such examinations and tests shall be properly maintained by the Contractor and will be promptly produced as and when desired by the Engineer or by the person authorised by him.

PC 22.4.3.7 The Contractor shall be fully responsible for the safe storage of his and his Sub-Contractor's radioactive sources in accordance with BARC/DAE Rules and other applicable provisions. All precautionary measures stipulated by BARC/DAE in connection with use, storage and handling of such material will be taken by the Contractor.

PC 22.4.3.8 The Contractor shall provide suitable safety equipment of prescribed standard to all employees and workmen according to the need, as may be directed by the Engineer who will also have right to examine these safety equipment to determine their suitability, reliability, acceptability and adaptability.

PC 22.4.3.9 Where explosives are to be used, the same shall be used under the direct control and supervision of an expert, experienced, qualified and competent person strictly in accordance with the Code of Practice/Rules framed under Indian Explosives Act pertaining to handling, storage and use of explosives.

PC 22.4.3.10 The Contractor shall provide safe working conditions to all workmen and employees at the Site including safe means of access, railings, stairs, ladders, scaffoldings etc. The scaffoldings shall be erected under the control and supervision of an experienced and competent person. For erection, good and standard quality of material only shall

be used by the Contractor.

PC 22.4.3.11 The Contractor shall not interfere or disturb electric fuses, wiring and other electrical equipment belonging to the Owner or other Contractors under any circumstances, whatsoever, unless expressly permitted in writing by THE EMPLOYER to handle such fuses, wiring or electrical equipment

PC 22.4.3.12 Before the Contractor connects any electrical appliances to any plug or socket belonging to the other Contractor or Owner, he shall:

a. Satisfy the Engineer that the appliance is in good working condition;

b. Inform the Engineer of the maximum current rating, voltage and phases of the appliances;

c. Obtain permission of the Engineer detailing the sockets to which the appliances may be connected.

PC 22.4.3.13 The Engineer will not grant permission to connect until he is satisfied that;

a. The appliance is in good condition and is fitted with suitable plug;
b. The appliance is fitted with a suitable cable having two earth conductors, one of which shall be an earthed metal sheath surrounding the cores.

PC 22.4.3.14 No electric cable in use by the Contractor/Owner will be disturbed without prior permission. No weight of any description will be imposed on any cable and no ladder or similar equipment will rest against or attached to it.

PC 22.4.3.15 No repair work shall be carried out on any live equipment. The equipment must be declared safe by the Engineer and a permit to work shall be issued by the Engineer before any repair work is carried out by the Contractor. While working on electric lines/equipment, whether live or dead, suitable type and sufficient quantity of tools will have to he provided by the Contractor to

electricians/workmen/officers.

PC 22.4.3.16 The Contractors shall employ necessary number of qualified, full time electricians/electrical supervisors to maintain his temporary electrical installation.

PC 22.4.3.17 The Contractor employing more than 250 workmen whether temporary, casual, probationer, regular or permanent or on contract, shall employ at least one full time officer exclusively as safety officer to supervise safety aspects of the equipment and workmen, who will coordinate with the Project Safety Officer. In case of work being carried out through Sub-Contractors, the Sub-Contractor's workmen/employees will also be considered as the Contractor's employees/workmen for the above purpose.

The name and address of such Safety Officers of the Contractor will be promptly informed in writing to Engineer with a copy to Safety Officer-In charge before he starts work or immediately after any change of the incumbent is made during currency of the Contract.

PC 22.4.3.18 In case any accident occurs during the construction/ erection or other associated activities undertaken by the Contractor thereby causing any minor or major or fatal injury to his employees due to any reason, whatsoever, it shall be the responsibility of the Contractor to promptly inform the same to the Engineer in prescribed form and also to all the authorities envisaged under the applicable laws.

PC 22.4.3.19 The Engineer shall have the right at his sole discretion to stop the work, if in his opinion the work is being carried out in such a way that it may cause accidents and endanger the safety of the persons and/or property, and/or equipment. In such cases, the Contractor shall be informed in writing about the nature of hazards and possible injury/accident and he shall comply to remove shortcomings promptly. The Contractor after stopping the specific work can, if felt necessary, appeal against the order of stoppage of work to the Engineer within 3 days

of such stoppage of work and decision of the Engineer in this respect shall be conclusive and binding on the Contractor.

PC 22.4.3.20 The Contractor shall not be entitled for any damages/compensation for stoppage of work due to safety reasons as provided in para GCC 22.4.3.19 above and the period of such stoppage of work will not be taken as an extension of time for completion of work and will not be the ground for waiver of levy of liquidated damages.

PC 22.4.3.21 It is mandatory for the Contractor to observe during the execution of the works, requirements of Safety Rules which would generally include but not limited to following:

Safety Rules

a) Each employee shall be provided with initial indoctrination regarding safety by the Contractor, so as to enable him to conduct his work in a safe manner.

b) No employee shall be given a new assignment of work unfamiliar to him without proper introduction as to the hazards incident thereto, both to himself and his fellow employees.

c) Under no circumstances shall an employee hurry or take unnecessary chance when working under hazardous conditions.

d) Employees must not leave naked fires unattended. Smoking shall not be permitted around fire prone areas and adequate fire fighting equipment shall be provided at crucial location.

e) Employees under the influence of any intoxicating beverage, even to the slightest degree shall not be permitted to remain at work.

f) There shall be a suitable arrangement at every work site for rendering prompt and sufficient first aid to the injured.

g) The staircases and passageways shall be adequately lighted.

h) The employees when working around moving machinery, must not be permitted to wear loose garments. Safety shoes are recommended when working in shops or places where materials or tools are likely to fall. Only experienced workers shall be permitted to go behind guard rails or to clean around energized or moving equipment.

i) The employees must use the standard protection equipment intended for each job. Each piece of equipment shall be inspected before and after it is used.

j) Requirements of ventilation in underwater working to Licenced and experienced divers, use of gum boots for working in slushy or in inundated conditions are essential requirements to be fulfilled.

k) In case of rock excavation, blasting shall invariably be done through Licenced blasters and other precautions during blasting and storage/transport of charge material shall be observed strictly.

PC 22.4.3.22 The Contractor shall follow and comply with all THE EMPLOYER Safety Rules, relevant provisions of applicable laws pertaining to the safety of workmen, employees, plant and equipment as may be prescribed from time to time without any demur, protest or contest or reservations. In case of any discrepancy between statutory requirement and THE EMPLOYER Safety Rules referred above, the latter shall be binding on the Contractor unless the statutory provisions are more stringent.

PC22.4.3.23 If the Contractor fails in providing safe working

environment as per THE EMPLOYER Safety Rules or continues the work even after being instructed to stop work by the Engineer as provided in para GCC 22.4.3.19 above, the Contractor shall promptly pay to THE EMPLOYER, on demand by the Owner, compensation at the rate of Rs.5, 000/- per day of part thereof till the instructions are complied with and so certified by the Engineer. However, in case of accident taking place causing injury to any individual, the provisions contained in para GCC 22.4.3.24 shall also apply in addition to compensation mentioned in this para.

PC 22.4.3.24 If the Contractor does not take adequate safety precautions and/or fails to comply with the Safety Rules as prescribed by THE EMPLOYER or under the applicable law for the safety of the equipment and plant or for the safety of personnel or the Contractor does not prevent hazardous conditions which cause injury to his own employees or employees of other Contractors or THE EMPLOYER employees or any other person who are at Site or adjacent thereto, then the Contractor shall be responsible for payment of a sum as indicated below to be deposited with THE EMPLOYER, which will be passed on by THE EMPLOYER to such person or next to kith and kin of the deceased:

a.	Fatal injury or accident causing death	Rs. 1,000,000/- per person
b.	Major injuries or accident causing 25% or more permanent disablement	Rs. 100,000/- per person

Permanent disablement shall have same meaning as indicated in Workmen's Compensation Act. The amount to be deposited with THE EMPLOYER and passed on to the person mentioned above shall be in addition to the compensation payable under the relevant provisions of the Workmen's Compensation Act and rules framed there under or any other applicable laws as applicable from time to time. In case the Contractor does not deposit the above mentioned amount with THE EMPLOYER, such

amount shall be recovered by THE EMPLOYER from any monies due or becoming due to the Contractor under the contract or any other on-going contract.

PC22.4.3.25 If the Contractor observes all the Safety Rules and Codes, Statutory Laws and Rules during the currency of Contract awarded by the Owner and no accident occurs then THE EMPLOYER may consider the performance of the Contractor and award suitable 'ACCIDENT FREE SAFETY MERITORIOUS AWARD' as per scheme as may be announced separately from time to time.

PC22.4.3.26 The Contractor shall also submit 'Safety Plan' as per proforma specified in Section IX: Contract Forms, Part-3 of Bidding Documents alongwith all the requisite documents mentioned therein and as per check-list contained therein to the Engineer In-Charge for its approval within 60 days of award of Contract.

Further, one of the conditions for release of first progressive payment / subsequent payment towards Services Contract shall be submission of 'Safety Plan' alongwith all requisite documents and approval of the same by the Engineer In-Charge.

PC 22.6 Emergency Work (GC Clause 22.6)

Replace the words "Otherwise" with "In case such work is not in the scope of the Contractor", in the second last line of second paragraph of GC clause 22.6.

PC 23.3 Supplementing sub-clause GC 23.3

For notification of testing, four weeks shall be deemed as reasonable advance notice.

PC 23.7 Test and Inspection (GC Clause 23.7)

Replace the words "GC Sub-Clause 6.1" with "GC Sub-Clause 46.1", in the last line of GC clause 23.7.

ANNEXURE VIII

Approved Labour License & Insurance Policy by Contractor

R-E-410 dt-27/11/18

GOVERNMENT OF INDIA
MINISTRY OF LABOUR & EMPLOYMENT
OFFICE OF THE ASSISTANT LABOUR COMMISSIONER (CENTRAL)
COLLEGE ROAD, SILCHAR-788 004, ASSAM
E-mail alc.sil-as@gov.in
TELEPHONE NO. 03842-267330

No. 46 | 113 | 2018-S/A Dated – 16. 04. 2018

To

M/s POWER MECH PROJECTS LIMITED
POWER GRID CORPORATION OF INDIA LIMITED CONTRACTOR
REPRESENTED THROUGH:
(1) Shri S. KISHORE BABU, CHARIMAN & MANAGING DIRECTOR
S/O SHESHAGIRI RAO SAJJA
(2) Shri N. BHUPESH CHOWDARY, WHOLE TIME DIRECTOR & CEO
S/O ETHIRAJULU NAGINENI
(3) Shri G.D.V.PRASADA RAO, INDEPENDENT DIRECTOR
S/O KRISHNA RAO GORIJALA
(4) Shri SANTOSH KUMAR SINHA, ASSISTANT GENERAL MANAGER (AGM-SMX) & POWER OF ATTORNEY
S/O SHRIDHAR PRASAD SINHA
REGISTERED & CORPORATE OFFICE: PLOT NO. 77, JUBILEE ENCLAVE, OPPOSITE HITEX MADHAPUR, HYDERABAD – 500081. **E-mail info@powermech.net / M – 09371105842.**

Subject: *Contract Labour (Regulation and Abolition) Act, 1970 and Contract Labour Regulation & Abolition Central Rules, 1971 – Issue of Licence to M/s POWER MECH PROJECTS LIMITED, POWER GRID CORPORATION OF INDIA LIMITED CONTRACTOR, REGISTERED & CORPORATE OFFICE: PLOT NO. 77, JUBILEE ENCLAVE, OPPOSITE HITEX, MADHAPUR, HYDERABAD – 500081.*

Dear Sir,

Please refer to your Application for Licence No. PMPL/PGCIL/NAG/SS-PKG/2018-19/06 dated-10.04.2018 received at this office on 16.04.2018) for issue of Licence under Section-12 (1) of the Contract Labour (Regulation and Abolition) Act, 1970.

I, in accordance with the provisions under Section-12 (1) of the said Act under the Authority vested upon me as the Licensing Officer of the area hereby issue the Licence in FORM-VI prescribed under the Contract Labour Regulation and Abolition) Central Rules, 1971 against the work "Supply of Services Contract for Substation Package-NAG-SS-04 including Transformer for (i) 132/33 KV Pfutsero (New) S/S and (ii) 132 KV Wokha S/S (Extn) under Transmission System for Nagaland State associated with NER Power System Improvement Project. Specification No. CC-CS/92-NER/SS-3622/1/G3 (NAG-SS-04) & NOA No. CC-CS/92-NER/SS-3622/1/G3/NOA-II/7550 dated-13.12.2017.

Licence is issued without prejudice to the legal action taken or to be taken by the Department for not obtaining License in the past.

Please acknowledge the receipt of the same.

Enclo: 1 (ONE) LICENCE

Yours faithfully,

Assistant Labour Commissioner (Central)
Government of India
SILCHAR

Govt. of India
Ministry of Labour & Employment

Copy forwarded to:

(1) The Deputy Chief Labour Commissioner (Central), GUWAHATI.

(2) The Labour Enforcement Officer (Central), LUMDING. A copy of the application for Licence in FORM-II received from the Contractor is enclosed herewith vide Licence No. CLA/106/2018-S/A dated-16.04.2018 has been granted to the Contractor for 50 (FIFTY) labours.

(3) Shri L. A. Sharma, Assistant General Manager, Power Grid Corporation of India Limited, NERPSIP, Nagaland, Upper Chandmari Lane, PWD Road, Opposite PWD Central Store, Kohima-797001, Nagaland for information vide Licence No. CLA/106/2018-S/A dated-16.04.2018 issued to M/s POWER MECH PROJECTS LIMITED for 50 (FIFTY) labours.

Assistant Labour Commissioner (Central)
Government of India
SILCHAR

Asstt. Labour Commissioner (Central)
Silchar & Registering/ Licensing Officer
Under C.L. (R&A) Act. 1970

FORM-VI
(SEE RULE- 25(1)
GOVERNMENT OF INDIA
MINISTRY OF LABOUR & EMPLOYMENT
OFFICE OF THE LICENSING OFFICER
AND ASSISTANT LABOUR COMMISSIONER (CENTRAL)
COLLEGE ROAD, SILCHAR-788004, DIST. CACHAR, ASSAM

LICENCE NO. CLA/106/2018-S/A DATE: 16.04.2018

LICENCE FEE PAID	Rs.38.00 (RUPEES THIRTY EIGHT) ONLY	Deposited through bharatkosh.gov.in vide Transaction Ref. No. 1004180001454 dated – 10.04.2018

LICENCE

1. Licence is hereby granted to M/s POWER MECH PROJECTS LIMITED, POWER GRID CORPORATION OF INDIA LIMITED CONTRACTOR, REPRESENTED THROUGH: (1) Shri S. KISHORE BABU, CHARIMAN & MANAGING DIRECTOR, S/O SHESHAGIRI RAO SAJJA (2) Shri N. BHUPESH CHOWDARY, WHOLE TIME DIRECTOR & CEO, S/O ETHIRAJULU NAGINENI (3) Shri G.D.V.PRASADA RAO, INDEPENDENT DIRECTOR, S/0 KRISHNA RAO GORIJALA (4) Shri SANTOSH KUMAR SINHA, ASSISTANT GENERAL MANAGER (AGM-SMX) & POWER OF ATTORNEY, S/O SHRIDHAR PRASAD SINHA, REGISTERED & CORPORATE OFFICE: PLOT NO. 77, JUBILEE ENCLAVE, OPPOSITE HITEX, MADHAPUR, HYDERABAD – 500081 under Section 12 (1) of the Contract Labour (Regulation and Abolition) Act, 1970 subject to the conditions specified in the ANNEXURE.

2. The Licence is for doing the work – "Supply of Services Contract for Substation Package-NAG-SS-04 including Transformer for (i) 132/33 KV Pfutsero (New) S/S and (ii) 132 KV Wokha S/S (Extn) under Transmission System for Nagaland State associated with NER Power System Improvement Project. Specification No. CC-CS/92-NER/SS-3622/1/G3 (NAG-SS-04) & NOA No. CC-CS/92-NER/SS-3622/1/G3/NOA-II/7550 dated-13.12.2017" in the establishment of Shri L. A. Sharma, Assistant General Manager, Power Grid Corporation of India Limited, NERPSIP, Nagaland, Upper Chandmari Lane, PWD Road, Opposite PWD Central Store, Kohima-797001,Nagaland.

3. The Licence shall remain in force TILL 15. 04. 2019

Date: 16.04.2018

Signature and Seal of Licensing Officer

Asstt. Labour Commissioner (Central)
Silchar & Registering/ Licensing Officer
Under C.L. (R&A) Act. 1970

Asstt. Labour Commissioner (C)-cum Registering / Licensing Officer Under C.L. (R&A) Act. 1970
Govt. of India
Ministry of Labour & Employment
Silchar

RENEWAL
(Rule-29)

Date of Renewal	*Fee paid for Renewal*	*Date of Expiry*	*Signature and Seal of Licensing Officer and Date*

ANNEXURE

THE LICENCE IS SUBJECT TO THE FOLLOWING CONDITIONS:

1. The Licence shall be non - Transferable.

2. The number of workmen employed as Contract Labour in the establishment shall not, on any day, exceed **50 (FIFTY) NOS.**

3. Except as provided in the rules the fees paid for the grant, or as the case may be, for renewal of the licence shall be non refundable.

4. The rates of wages payable to the workmen by the contractor shall not be less than the rates prescribed for the Schedule of Employment under the Minimum Wages Act, 1948 (11 of 1948), and where applicable and where the rates have been fixed by agreement, settlement or award, not less than the rates so fixed.

5. (a) In case where the workmen employed by the contractor perform the same or similar kind of work as the workmen directly employed by the principal employer of the establishment, the wage rates, holidays, hours of work and other conditions of service of the workmen of the contractor shall be the same as applicable to the workmen directly employed by the principal employer of the establishment on the same or similar kind of work; provided that in the case of any disagreement with regard to the type of work the same shall be decided by the Deputy Chief Labour Commissioner (Central) whose decision shall be final.

(b) In other cases the wage rates, holidays, hours of work and conditions of service of the workmen of the contractor shall be such as may be specified in this behalf by the Deputy Chief Labour Commissioner (Central).

6. Every Contract Labour shall be entitled to allowances, benefits, facilities etc. as prescribed in the Contract Labour (Regulation and Abolition) Act, 1970 (37 of 1970) and Rules made there under.

7. In every establishment where 20 (twenty) or more female workmen are ordinarily employed as contract labour there shall be provided 2 (two) rooms of reasonable dimensions for the use of their children under the age of 6 (six) years. One of such rooms would be used as a playroom for the children and the other as bedroom for the children. For this purpose the contractor shall supply adequate number of toys and games in the playroom and sufficient number of cots and beddings in the sleeping room. The standard of construction and maintenance of the crèches may be such as specified in this behalf by the Chief Labour Commissioner (Central) New Delhi.

8. No women shall be employed by any Contractor before 6 A.M. or after 7 P.M.

   Provided that this clause shall not apply to the employment of workmen in pit head baths, crèches and canteen and as mid-wives and nurses in Hospitals and Dispensaries.

9. The licence shall notify any change in the number of workmen or the conditions of work to the Licencing Officer.

10. A copy of the licence shall be displayed prominently at the premises where the contract work is being carried on.

11. The Licence shall, within 15 (fifteen) days of the commencement and completion of each contract work, submit a return to the Inspector appointed under Section 28 of the Contract Labour (Regulation and Abolition) Act, 1970 (37 of 1970) intimating the actual date of the commencement or, as the case may be, completion of such contract work in FORM VII.

12. Renewal of Licence: Every such application shall be in Form-II (in triplicate) and shall be made not less than 30(THIRTY) days before the date on which the licence expires.

Date: 16.04.2018

Asstt. Labour Commissioner (Central) cum Registering / Licensing Officer Under C.L.(R&A) Act. 1970 * Govt. of India Ministry of Labour & Employment Silchar

Assistant Labour Commissioner (Central) and
Licensing Officer and Registering Officer under
Contract Labour (Regulation and Abolition) Act, 1970

Asstt. Labour Commissioner (Central)
Silchar & Registering/ Licensing Officer
Under C.L. (R&A) Act. 1970

GOVERNMENT OF INDIA
MINISTRY OF LABOUR & EMPLOYMENT
OFFICE OF THE ASSISTANT LABOUR COMMISSIONER (CENTRAL)
COLLEGE ROAD, SILCHAR-788 004, ASSAM
E-mail alc.sil-as@gov.in
TELEPHONE NO. 03842-267330

No. 57 (89) / 2018-S/A

Dated: 16.04.2018

To

M/s POWER MECH PROJECTS LIMITED
POWER GRID CORPORATION OF INDIA LIMITED CONTRACTOR
REPRESENTED THROUGH:
(1) Shri S. KISHORE BABU, CHARIMAN & MANAGING DIRECTOR
S/O SHESHAGIRI RAO SAJJA
(2) Shri N. BHUPESH CHOWDARY, WHOLE TIME DIRECTOR & CEO
S/O ETHIRAJULU NAGINENI
(3) Shri G.D.V.PRASADA RAO, INDEPENDENT DIRECTOR
S/O KRISHNA RAO GORIJALA
(4) Shri SANTOSH KUMAR SINHA, ASSISTANT GENERAL MANAGER (AGM-SMX) & POWER OF ATTORNEY
S/O SHRIDHAR PRASAD SINHA
REGISTERED & CORPORATE OFFICE: PLOT NO. 77, JUBILEE ENCLAVE, OPPOSITE HITEX MADHAPUR, HYDERABAD – 500081. **E-mail info@powermech.net / M – 09371105842.**

Subject: *Building and Other Construction Workers (Regulation of Employment and Condition of Service) Act, 1996 and Building and Other Construction Workers (Regulation of Employment and Condition of Service) Central Rules, 1998 – Issue of Registration to M/s POWER MECH PROJECTS LIMITED, POWER GRID CORPORATION OF INDIA LIMITED CONTRACTOR, REGISTERED & CORPORATE OFFICE: PLOT NO. 77, JUBILEE ENCLAVE, OPPOSITE HITEX, MADHAPUR, HYDERABAD – 500081.*

Dear Sir,

Please refer to your Application for Registration No. PMPL/PGCIL/NAG/SS-PKG/2018-19/06 dated-10.04.2018 (received at this office on 16.04.2018) in respect of Registration under Section 7(3) of the Building and Other Construction Workers (Regulation of Employment and Condition of Service) Act, 1996.

I, in accordance with the provisions under Section-7 (3) of the said Act under the Authority vested to me as the Registering Officer of the area hereby issue the Registration in FORM-II prescribed under the Building and Other Construction Workers (Regulation of Employment and Condition of Service) Act, 1996 against the work "Supply of Services Contract for Substation Package-NAG-SS-04 including Transformer for (i) 132/33 KV Pfutsero (New) S/S and (ii) 132 KV Wokha S/S (Extn) under Transmission System for Nagaland State associated with NER Power System Improvement Project. Specification No. CC-CS/92-NER/SS-3622/1/G3 (NAG-SS-04) & NOA No. CC-CS/92-NER/SS-3622/1/G3/NOA-II/7550 dated-13.12.2017".

The Registration is issued without prejudice to the legal action taken or to be taken by the Department for not obtaining Registration in the past.

Please acknowledge the receipt.

Enclo: 1 (One) Registration.

Yours faithfully,

Assistant Labour Commissioner (Central)
Government of India
SILCHAR

Asstt. Labour Commissioner (C), Silchar * Registering Officer *
Govt of India
Ministry of Labour & Employment Building & Other Construction Workers (Regulation Employment & Condition of Service) Act, 1996

Copy forwarded to:

(1) *The Deputy Chief Labour Commissioner (Central), GUWAHATI.*
(2) *The Labour Enforcement Officer (Central), LUMDING. A copy of the application for Registration in FORM-I received from the Contractor is enclosed herewith vide Registration No. REG/BOCW/89/2018-S/A dated - 16.04.2018 has been granted to the Contractor for 50 (FIFTY) labours.*
(3) *Shri L. A. Sharma, Assistant General Manager, Power Grid Corporation of India Limited, NERPSIP, Nagaland, Upper Chandmari Lane, PWD Road, Opposite PWD Central Store, Kohima-797001, Nagaland for information.*

16/04/18

Assistant Labour Commissioner (Central)
Government of India
SILCHAR

Asstt. Labour Commissioner (Central)
Silchar & Registering Officer Under
B.O.C.W. (R.E. & C.S) Act, 1996

FORM – II
{See Rule – 24(1)}

No. REG/BOCW/89/2018-S/A *Date: 16. 04. 2018*

GOVERNMENT OF INDIA
MINISTRY OF LABOUR & EMPLOYMENT
OFFICE OF THE REGISTERING OFFICER &
ASSISTANT LABOUR COMMISSIONER (CENTRAL)
COLLEGE ROAD, SILCHAR-788004, CACHAR, ASSAM

A certificate of Registration is hereby granted under Sub-Section (3) of Section-7 of the Building and Other Construction Workers (Regulation of Employment and Condition of Service) Act, 1996 and the rules made there under to M/s POWER MECH PROJECTS LIMITED, POWER GRID CORPORATION OF INDIA LIMITED CONTRACTOR, REPRESENTED THROUGH:(1) Shri S. KISHORE BABU, CHARIMAN & MANAGING DIRECTOR, S/O SHESHAGIRI RAO SAJJA (2) Shri N. BHUPESH CHOWDARY, WHOLE TIME DIRECTOR & CEO, S/O ETHIRAJULU NAGINENI (3) Shri G.D.V.PRASADA RAO, INDEPENDENT DIRECTOR, S/O KRISHNA RAO GORIJALA (4) Shri SANTOSH KUMAR SINHA, ASSISTANT GENERAL MANAGER (AGM-SMX) & POWER OF ATTORNEY, S/O SHRIDHAR PRASAD SINHA, REGISTERED & CORPORATE OFFICE: PLOT NO. 77, JUBILEE ENCLAVE, OPPOSITE HITEX, MADHAPUR, HYDERABAD – 500081 having the following particulars subject to conditions laid down in the Annexure.

1	*Postal address / location where building orother construction work is to be carried on by the Employer*	*M/s POWER MECH PROJECTS LIMITED, POWER GRID CORPORATION OF INDIA LIMITED CONTRACTOR, Work Site At – Services Contract for Substation Package-NAG-SS-04 including Transformer for (i) 132/33 KV Pfutsero (New) S/S and (ii) 132 KV Wokha S/S (Extn) under Transmission System for Nagaland State associated with NER Power System Improvement Project*
2	*Name and address of employer including location of the building & other construction work*	*As above in Sl. No.1*
3	*Name and permanent address of the establishment.*	*M/s POWER MECH PROJECTS LIMITED, POWER GRID CORPORATION OF INDIA LIMITED CONTRACTOR, REGISTERED & CORPORATE OFFICE: PLOT NO. 77, JUBILEE ENCLAVE, OPPOSITE HITEX, MADHAPUR, HYDERABAD – 500081*
4	*Nature of work in which building workers are employed or are to be employed.*	*Supply of Services Contract for Substation Package-NAG-SS-04 including Transformer for (i) 132/33 KV Pfutsero (New) S/S and (ii) 132 KV Wokha S/S (Extn) under Transmission System for Nagaland State associated with NER Power System Improvement Project. Specification No. CC-CS/92-NER/SS-3622/1/G3 (NAG-SS-04) & NOA No. CC-CS/92-NER/SS-3622/1/G3/NOA-II/7550 dated-13.12.2017*
5	*Maximum number of building workers to be employed on any day by the employer*	*50 (FIFTY) NOS.*
6	*Probable date of commencement and completion of work*	*30.11.2017 TO 30.05.2020*
7	*Other particulars relevant to the Employment of building workers*	*NIL*

Place: SILCHAR
Date: 16.04.2018

Signature of Registering Officer with Seal

Asstt. Labour Commissioner (Central)
Silchar & Registering Officer Under
B.O.C.W. (R.E. & C.S) Act, 1996

ANNEXURE

The registration granted herein above is subject to the following conditions, namely:

(a) *The certificate of registration shall non-transferable.*
(b) *The number of workmen employed or building workers in the establishment shall not, on any day, exceed the maximum number specified in the certificate of registration.*
(c) *Save or provided in these rules, the fees paid for the grant of registration certificate shall be non-refundable.*
(d) *The rates of wages payable to building workers by the employer shall not be less than the rates prescribed under the Minimum Wages Act, 1948 (II of 1948) for such employment where applicable, and where the rates have been fixed by agreement, settlement or award, not less than the rates so fixed AND*
(e) *The employer shall comply with the provisions of the Act and the rules made there under.*

16/04/18

Signature of Registering Officer with Seal

Asstt. Labour Commissioner (Central)
Silchar & Registering Officer Under
B.O.C.W. (R.E. & C.S) Act, 1996

ANNEXURE IX

Safety Checklists

पावर ग्रिड कारपोरेशन ऑफ इंडिया लिमिटेड
(भारत सरकार का उद्यम)
POWER GRID CORPORATION OF INDIA LIMITED
(A Government of India Enterprise)
पावरग्रिड

(NORTH EASTERN REGION POWER SYSTEM IMPROVEMENT PROJECT)
NAGALAND: KOHIMA
NORTH EASTERN REGION

Ref no: NERPSIP/KOH/HSE//1421 **Date: 06.05.2019**

To

M/s Shyama Power India Ltd.
Naga Cottage, Circular Road
Dimapur-797112, Nagaland

Kind Attention: Mr.D.R.K. Ganesh, GM (Projects)

Sub: Safety Check/Audit

Dear Sir,

I have visited construction sites TW-01(220kV) on 23rd April 2019. The safety Check has been carried out along with your Safety Officer & Site Engineer. During the safety check some lapses pertaining to safety related aspects have been observed. The observations are:-

Location no. AP-03, Zhadima under TW-01

1. First Aid Box & Register was not available at construction site.
2. During audit it has observed that Dust Musk is not provided to the workers.
3. Appropriate safety massages/ Safety poster/Warning shall be displayed at prominent locations of the working site.
4. Pep talk/Tool Box talk record is not available at site. Pep talk/Tool Box talk record shall be maintained at site.

Page-01 (Con.)

You are requested to look in to the matter seriously and comply the observations immediately failing of which, action shall be taken as per terms and condition of contract. The compliance report shall be submitted to NERPSIP, Kohima office. Further it is requested to ensure the implementation of proper safety measures at working site to avoid any problematic incidence.

With Regards,

POWERGRID NERPSIP KOHIMA
पावरग्रिड

Your's faithfully,

Ratan Kumar Jena 06.05.2019

Ratan Kumar Jena
FO (ESM), NERPSIP, Nagaland

Copy to:

1. GM, NERPSIP, Nagaland

पंजीकृत कार्यालय : बी–9, कुतब इंस्टीट्यूशनल एरिया, कटवारिया सराय, नई दिल्ली -110016, दूरभाष : 26560121फैक्स : 011-26560039
तार : 'नेटग्रिड'

Registered Office : B-9, Qutab Institutional Area, Katwaria Sarai, New Delhi-110 016, Tel.: 26560121 Fax : 011-26560039
Gram : 'NATGRID'

स्वहित एवं राष्ट्र हित में ऊर्जा बचाएं

Save Energy for Benefit of Self and Nation

POWER GRID CORPORATION OF INDIA LTD.,
(CORPORATE OPERATION SERVICES)

SITE SAFETY INSPECTION / AUDIT CHECK LIST

EXCAVATION & FOUNDATION

DATE OF INSPECTION: 23.04.19 **NAME OF THE LINE :** 220 KV line (TW-01) New Kohima – Mokokchung

LOCATION NO: AP-03 **CLASSIFICATION OF SOIL & TYPE OF TOWER:** DD+6 type Towers

NAME OF THE AGENCY: Shyma Power India Ltd.

SITE ENGINEER / SUPERVISOR OF THE AGENCY: Nirmal.

SAFETY OFFICER OF THE AGENCY: EKRAMUL HAQUE.

S.NO:	CHECK LIST	YES / NO	REMARKS, IF ANY
1	Check List to be verified by the Agency's Site supervisor / Gang leader is available at Site and updated.	YES.	
2	Safe Work Procedures / Instructions in the language understood by the workers available with Site supervisor / Gang leader and workers are aware of the safe work procedures.	YES.	
3	Pep talk on safety issues to the workers being done by the Safety Stewards / Supervisor / Engineer / Safety Officer of the Agency.	NO.	No records maintained by Contractor
4	Appropriate safety messages / warnings are displayed at site to caution the workers	NO	
5	Adequate warning / protection to public / children moving nearby ensured (RED FLAGS / CAUTION TAPE / ROPE / BOARDS).	NO	
6	Sufficient Angle of Repose / slope provided to prevent collapse of soil at vulnerable locations.	YES.	
7	Adequate shoring and shuttering provided in colapsible soil conditions.	YES.	
8	(a) Drilling and Blasting, if any, carried out with adequate precautions. (b) Whether the blaster is a valid license holder?	N/A.	
9	Dewatering of the pits is being done, wherever required.	YES.	
10	Clear edges to prevent fall of objects inside the pit – the excavated earth, stones and tools dumped atleast half of the depth of the pit away from the pit edges.	YES	
11	Machines like concrete mixer, vibrator, etc, placed away atleast half of the depth of the pit from the pit to avoid collapse of the pit due to vibrations produced by these machines.	YES	

Contd..2..

12	The steel plate (chute)used for pouring the concrete into the pit properly anchored to prevent the same from falling into the pit, endangering the persons inside the pit.	YES	
13	Jacks used for supporting the template are properly positioned / anchored to avoid sliding down of the template from the jacks and endangering the workers .	YES	
14	All ladders used are of sound construction, appropriate height and free from any defect.	YES.	
15	All the workers are provided with good quality SAFETY HELMETS confirming to BIS Standard IS:2925.	YES.	
16	All the workers engaged in steel work are provided with LEATHER SAFETY GLOVES.	NO.	
17	The workers engaged in concreting work inside the pit are provided with GUMBOOTS.	YES	
18	The workers engaged in handling cement are provided with appropriate DUST MASKS.	NO.	
19	Appropriate SAFETY BELT / fall protection provided to workers working on form box to pour concrete into the form box / ramming in form box.	YES	
20	(a) First aid box with listed items as per BOCW Act, 1996 available. (b) Number of First Aid Trained persons and their names. (c) First Aid Register is available at site. (d) Nearby medical facilities for use during exigencies identified (Location / Phone No.)	N/A.	
21	Atleast one vehicle (four wheeler) is available for use in case of emergencies.	YES	

POWERGRID NERPSIP KOHIMA

Rajan Kumar Jena

SIGNATURE / NAME / DESIGNATION
OF POWERGRID REPRESENTATIVE

EKRAMUL HAQUE. (SAFETY OFFICER)

SIGNATURE / NAME / DESIGNATION
OF AGENCY'S REPRESENTATIVE

Copy To:

(5) Regional In-charge / POWERGRID / _____

(6) Projects In-charge (Region) / POWERGRID / _____

(7) Site Incharge / POWERGRID / _____

(8) Project In-charge / AGENCY / _____

M/S SHYAMA POWER INDIA LTD.

Safety Related Check List during Construction of Substation

Date of Safety Audit: 08.02.2020

Name of Sub Stn. / Switching Stn.: 132/33 kV New Secretariat Complex (NV)

Voltage Level: 132 kV Name of the Agency: M/S Shyama Power India Ltd.

Name of Sub Contractor: M/S Shyama Power India Ltd.

Safety officer of the Agency Not Available for SS-03 package

Site Engineer/Supervisor of the agency Santosh Pandey

E: GENERAL POINTS COMMON FOR ALL ACTIVITIES DURING EXCAVATION, CASTING OF FOUNDATION

Erection of structures, laying of Conductor, storage and transportation of material:

S.No.	Description of Activity	Feedback Yes / No	Remarks
1.	Check Supervisors / Workmen have been provided with required healthy PPEs. Like (Safety helmet / Safety Belts / Safety Shoes / Gum Boot etc. as applicable)	Yes / No	Yes.
2.	Check availability of First Aid Box with required medicines at site.	Yes / No	Yes
3.	Check Site Instruction register is available at site.	Yes / No	yes.
4.	Ensure Supervisor / Gang Leader always issues instruction to the Workmen including contractor labour before start of work.	Yes / No	yes
5.	Ensure supervisory staff from Power Grid is available at site during construction.	Yes / No	yes
6.	Check all driver and plant operators are holding valid driving license.	Yes / No	yes.
7.	Check the vehicle for rescue is available at site.	Yes / No	NO.
8.	Ensure engaged labour are aware of the job.	Yes / No	Yes.
9.	Ensure supervisor / workmen engaged in the field are aware of First Aid Techniques (Such as in case of Electric Shock, fall from the height, Snake bite and the person rescued from buried under the debris, rescue of person from drowning etc.	Yes / No	yes.
10.	Check for availability and to keep a record of nearby Hospital / Doctor in case of emergencies arises.	Yes / No	yes.
11.	While transporting heavy consignment of conductor / EW drums from central store to site by the use of Cranes, Truck, Tractor. The safety aspect for construction and	Yes / No	yes

Santosh Pandey
08/02/2020.

SHYAMA POWER INDIA LIMITED

8.2.20

	failure of brake system of moving machinery is to be checked.		
12.	At least one dry powder type of portable fire extinguisher shall be provided especially where explosive or blasting agents are used for excavation. (If applicable)	Yes / No	Yes
13.	Check the competence (Qualification / experience) of supervisor / gang leader of contractor.	Yes / No	Yes
14.	Wire mesh rolls shall be secured in order to prevent dangerous recoiling action.	Yes / No	N/A
15.	Proper unloading arrangement has been made at site (Preferably with crane) to unload the material.	Yes / No	Yes
16.	After unloading the material visual inspection of the materials has been carried out along with the erection contractor to check that the material has not been damaged or not (Galvanizing is proper or not) As per approved Field Quality Plan etc.	Yes / No	Yes.
17.	While transporting the heavy laden equipment like transformer / Reactor by road from Rly Stn. to Substation check whether for all safety precaution taken. Like safe lifting capacity of crane, safe load on culvert / Bridge / Nala / Drain etc. and working plan is available at site with specific reference to safety e.g. local earthing, skilled & experience manpower, proper T&P, strength and LT wires / HT wires interrupting the height of equipment and the required clearance maintained etc. Permission to be obtained from concerned authority if required. "Impact recorder on the equipment like Reactor / Transformer must be installed during transportation"	Yes / No	Yes
18	Check that the adequate and safe means of access and aggress has been provided for all work places as far as reasonably practicable and is being used by the workers.	Yes / No	Yes
19	Check proper illumination is provided at the work places and their approaches including passage ways.	Yes / No	Yes
20	Check that the lamps have been protected by suitable guards where necessary to prevent danger, in case the lamp breaks.	Yes / No	Yes
21	Check loose materials which are not required for use shall not be placed or left so as dangerously to obstruct work places or passage ways.	Yes / No	No
22	Check all projected nails has been removed or bent over to prevent injury.	Yes / No	Yes

08/02/2020

SHYAMA POWER INDIA LIMITED

8.2.20

23	Check scrap, waste and rubbish has not been allowed to accommodate on the site or the scrap materials has been stored at the isolated place.	Yes / No	Yes
24	Check that the worker while working at height scaffold materials, waste materials and tools are not being thrown by them to cause injury to any person.	Yes / No	N/A
25	Check whether contractor has procured required quantity of PPE considering maximum number of erection gangs deployed at one time. Check the quantity of PPEs.	Yes / No	Yes
26	Check that the PPEs required by the workmen are being utilized by them always.	Yes / No	Yes
27	Check the worker is under constant surveillance by the other person while working at height.	Yes / No	Yes
28	Check construction site has been barricaded for unauthorized persons / animals.	Yes / No	N.O.
29	Check that lifting appliances and machines and vehicles used on the construction site is of sound material and good quality and is free from patent defects and is strong enough to with safely the load and stresses to which they will be subjected.	Yes / No	Yes
30	Check structures and equipment is being used only for the purpose for which they were intended.	Yes / No	Yes.
31	Check equipment has been operated by the competent person.	Yes / No	Yes.
32	Check portable ladders shall not exceed 9 Mts. in length, otherwise may cause danger while climbing of person and back legs shall be equally braced.	Yes / No	Yes.
33	Check unskilled labour are not utilized for skilled jobs and only experience persons are deployed for erection.	Yes / No	Yes.
34	Check no metallic measuring tapes are being used during expansion of charged bays.	Yes / No	Yes
35	Check metal ladders are not being used in the vicinity of exposed live electrical equipment.	Yes / No	Yes
36	Check one bore well is available for water supply in case Municipal Construction supply is not available.	Yes / No	Yes
37	Check charged area of a yard should be properly fenced off.	Yes / No	N/A.

08/02/2020.

R.K. Jena 8.2.20

38	Check ladders / lengthy articles / lengthy equipment's etc. should always be carried in horizontal position	Yes / No	Yes
39	Check insurance by contractor for the labour to provide adequate coverage for any accident etc.	Yes / No	Yes

REMARKS IF ANY:

Signature Name: Santosh Pandey. Designation: Site engg. Representative of Contractor	Signature Ratan Kumar Jena Name: RATAN KU. JENA Designation: FOREMAN Representative of KOHIMA POGERGRID	Signature Name: Designation:

Copy to:

1) Regional in- charge (Region)/POWERGRID/.....
2) Project manager/POWERGRID/.....✓.....
3) Site in charge/POWERGRID/.....✓.....
4) Project In-charge/AGENCY/.....✓.....

ANNEXURE X

Details of Public Consultation

ANNEXURE X

Details of Public Consultations with Various Stakeholders

Project	Place of Consultation	Persons Consulted
33/11 kV DMS Substation (New) Longleng	DMS Substation at Longleng	Contractor labor,IA & DPN Staff and Villagers
132/33 kV Substation (New) Longleng	Substation Site at Pungo Village and IA office, Longleng	IA Staff and Villagers

DMS Substation at Longleng Town

132/33 kV Longleng Substation Site

GM office, POWERGRID Kohima

Details of Public Consultation with Photographs

Project	Date of Meeting	Venue of Meeting	Mo. of Persons Attended	Persons Attended
Public Consultation Meeting				
132 kV S/C (On D/C Tower) Tuensang – Longleng Transmission Line	23.01.2015	Conference hall, DC Office, Longleng	24	Village head, Senior persons and general public, DPN Members, PGCIL representatives
Establishment of 132/33 kV Longleng (New) S/S	15.10.2018	Pongo Village Council Hill	12	Village head, Senior persons and general public of Pongo village, DPN Members, & PGCIL representatives.
	16.11.2018	Pongo Village, Longleng	10	Village head, Senior persons and general public of Pongo village, DPN Members, & PGCIL representatives.
	22.11.2018	Pongo Village, Longleng	10	Village Council Chairman/ G.B's of Pongo village, DPN Members, PGCIL and Techno Electric representatives.
	30.11.2018	Pongo Village, Longleng	15	Village Council Chairman/ G.B's of Pongo village, DPN Members, PGCIL and Techno Electric representatives.
	20.03.2019	Pongo Village Council Hill	10	Village Council Chairman/ G.B's of Pongo village, DPN Members, PGCIL and Techno Electric representatives.
132 kV S/C (On D/C Tower) Tuensang – Longleng Transmission Line	24.07.2019	Hakchang Village Council Hall, Longleng	8	Project affected person, village headmen, PGCIL & Shyama Power India Ltd. Representatives
	23.09.2019	Tuensang (C khel) Village Council Hall	9	Project affected person, village headmen of Tuensang village, PGCIL & Shyama Power India Ltd. Representatives
Informal Group Meeting				
Establishment of 132/33 kV Longleng (New) S/S	24.12.2018	Pongo village at S/S location	4	Village headmen, PGCIL and Techno Electric representatives.
	16.05.2019	Pongo village at S/S location	6	Land owner, villagers, PGCIL and Techno Electric representatives.
132 kV S/C (On D/C Tower) Tuensang – Longleng Transmission Line	22.09.2019	Hakchang Village Council Hall, Longleng	7	Village headmen, PGCIL & Shyama Power India Ltd. Representatives

(MOM) Minutes Of Meeting

The Public Consultancy Meeting at Longleng was held on 23 Jan 2015, at DC Office, Longleng. The meet was presided over by The District Commissioner (Longleng), Executive Engineer (Mr. Sikato) and POWERGRID Officials .

The Meeting was attended by people (GB and Village Chairman) of 7 Villages concerned with the Transmission and associated Distribution Lines discussed in the meet.

Firstly DC, welcomes the People and gestures a heart-warming thanks for being present out there in the Public Consultancy Meet.

Next, Mr. Sikato, (Executive Engineer) gave a brief detailing of this NERPSIP Program in the local Language (Nagamese), and explained how is it going to be beneficial for them. He then handed over the charge to Mr. Jayanta Bardhan (DGM/ NERPSIP Guwahati), who spoke elaborately about the reasons, cause and effect the Program will have on Longleng and the People of Nagaland as a whole.

Then Mr. Sutradhar (Manager/NERPSIP, Nagaland) spoke at length about the Project in Nagamese to the People.

After that, the Executive Engineer asked the people to come up with any queries and proposals if any they are having.

The public concerned was very happy and were willing to provide full cooperation in the successful completion of the Project.

They stressed the need and the dearth of Power they were facing in that part of NAGALAND, since Longleng was a newly formed District in 2014, and moreover queried about the Villages this Project would entail. To this, officials of POWER DEPT. of Nagaland and POWERGRID, together clarified the Villages concerned, and all the other related Queries.

Secondly the GB's and Village Chairman assured that if any confrontation or dispute arises with the local Public, the Village Council will see to it that the NERPSIP PROGRAM goes on with a rational motive and is not hampered by any such biased action by the Public.

The Meeting Concluded at a Positive Note, within 2 hours, where then the Public Posed for a Group photo with all concerned Officials of the Meet.

People were then asked to have their Lunch, which had been arranged for them, and the Program turned out to be quite a success.

MOM (NAGAMESE)

Public Consultation, World Bank laga meeting DC Office or Conference hall te 23 January 2015 laga hoise. Meeting te DC , Power Dept. laga Executive Engineer Sikato Sahab aru Power dept. laga SDO JE, POWERGRID laga Sahab khan aru 7 Village laga Chairman, Secretary aru GB vi thakise.

Meeting te DC Sahab sob Village laga manuh ke aha nimite besu thanks dise.

Power Dept. laga Sikato Sahab etu Project keneke hobo, kote jabo, sob manuh khen ke bujai dise. Tai enekhan vi koise je Tuensang pora 132KV Longleng te ahibo, aru tate 33 KV te Voltage Down hobo. 132 KV line aha time te manuh laga ghor aru ghas beya hole etu powergrid poisa dibo, Govt rate te. Etu Line hole Longleng laga manuh te besi develop hobole ase.

Sikato sahib to Powergrid laga DGM ke ei Project laga kobole koise. DGM Sahab e Project nimite bhal kene bujai dise, aru koise je Project te WORLD BANK aru Govt. of India laga poisa dise.

Tar pise Manager/NERPSIP Nagaland laga , Sutradhar Sahab e manuh khen ke Nagamese te pura Project tu besi bhal ke bujai dise. Manuh khen vi khus hoise.

Tar pise Sikato Saheb e GB, Village laga Chairman ke, kiba doubt hole hudibo dise.

Manuh khen ke uthi kene amake besi thanks dise, aru koise je full cooperation dibo. Lagile amak Public laga problem hole vi help koribo, kintu manuh khen ke bisarise je kaam tu bhal kene hoi jabo lage

Tar pisata, manuh ken ke loi, Power Dept. officials aru Powergrid Laga officials e mili kene lunch korise.

ATTENDANCE FOR THE PUBLIC CONSULTANCY MEETING HELD AT LONGENG, NAGALAND REGARDING THE NERPSIP PROGRAM, UNDER WORLD BANK ASSISTANCE ON 23/01/2015.

SL. No.	NAME	SIGNATURE	VILLAGE
1.	C.N. Kangto	V.CC	yimchong
2.	K. Nangbu		yangching
3.	Khangyong		Pongo.
4.	P. Asung.	VCC	yongphang.
5.	9. Metting	VCC	Pongo vill
6.	N. Yongkai	VCC.	Sakshi village
7.	T. Pangong	O.B	Pongo
8.	G. K. Ongba		Pongo
9.	K. Wannaii		Hongnyii
10.	P. Manphong		Pongo.
11.	H. ENYU		
12.	K. pangjii		PONGO
13.	K. Niamnyei	H/Bcruk	PONGO
14.	T. Bahadur		pongo
15.	H. R. Choudhury.		Y/Mam Longleng b/s.
16.	SHILU SDO(T) Dept. of Power		Powergrid, Guwahati. Dept. of Power, Mokokchung
17.	Thungbemo		Dept of Power MKG.
18.	Temjensoba		JE(E) Longleng Town

ATTENDANCE FOR THE PUBLIC CONSULTANCY MEETING HELD AT LONGENG, NAGALAND REGARDING THE NERPSIP PROGRAM, UNDER WORLD BANK ASSISTANCE ON 23/01/2015.

SL. No.	NAME	SIGNATURE	VILLAGE
19	P Longteng	[illegible]	PATODC
20.	Hentak	V.D.B [illegible]	Jongphang
21.	HONGKONG	HONGKONG	PONGO
22.	S Likato EE (TA)	[illegible]	
23	J BARDHAN	J Bardhan	PGCIL
24.	Deep Sarkar	Deep Sarkar	PGCIL

PROJECT SUMMARY

DEPARTMENT OF POWER, GOVT. OF NAGALAND

In order to strengthen the power scenario of the North Eastern States including Nagaland, the Government of India with the financial assistance of the WORLD BANK, has formulated the **North Eastern Region Power System Improvement Project (NERPSIP)** which envisages inconstruction of new power Sub-stations, Transmission &Distributionlines and simultaneously augmentation/expansion of the existing Sub-stations and Transmission lines. The NERPSIP in the state of Nagaland broadly aims at:-

- Load enhancement of the transmission and distribution network of Nagaland as well as reducing the transmission and distribution (T & D) loss.
- To adequately address the demand side management for ensuring adequate supply of electricity.

Department of Power, Govt. of Nagaland is the owner for the projects in the state of Nagaland under NERPSIP. Under the scope of NERPSIP, inter-alia, construction of ***132 KV S/C (on D/C Tower) Tuensang----Longleng T/L and associated distribution line connecting to 33 KV Longleng Town S/s***will be taken up by **POWERGRID** on behalf of **Dept. of Power, Nagaland** and will be handed over to the State after completion of the project. The construction of the above transmission line doesn't require any permanent land acquisition and the temporary damages caused will be adequately compensated. Adequate provision has been made in NERPSIP for payment of compensation to the project affected families for any damages caused during the project.

We hope that implementation of the North Eastern Power System Improvement Project (NERPSIP) in the state of Nagaland will definitely contribute in the socio-economic development of the state.

Department of Power, Govt. of Nagaland

Photographs of Public Consultation held at Longleng on 23.01.2015

15th Oct.2018 meeting held at Longleng	16th Nov.2018 meeting held at Pongo Village

22nd November 2018 at Pongo Village, Longleng	30th November 2018 at Pongo Village, Longleng

20th March 2019 Public consultation meeting held at Pongo Village, Longleng.	

16th May 2019 Informal meeting held at Pongo Village Longleng.	24th July 2019 meeting held at Hakchang village for 132kV Line

Meeting held at Hakchang on 22.09.2019 for 132kV Line	Meeting held at Tuensang Village on 23.09.2019 for 132kV Line

MAP

MAP - 1

TOPOGRAPHIC MAP SHOWING ROUTE DETAILS OF 132 kV S/C TUENSANG - LONGLENG TL AND 33 kV S/C LONGLENG - LONGLENG TOWN DL

33/11 kV Longleng Town Substation (New)

132/33 kV Longleng Substation (New)

132/33 kV Tuensang Substation (Extension)

- Tower - 33 kV Longleng - Longleng Town DL
- Tower - 132 kV S/C (on D/C Tower) Tuensang - Longleng TL
- RoW - 33 kV Longleng - Longleng Town DL
- RoW - 132 kV S/C (on D/C Tower) Tuensang - Longleng TL

Kilometers: 0 1 2 4 6 8