Document of
The World Bank

Report No: 153668

IMPLEMENTATION COMPLETION AND RESULTS REPORT

ON A

PURCHASE OF EMISSION REDUCTIONS
FROM THE COMMUNITY DEVELOPMENT CARBON FUND

TO THE

GUODIAN GUANGRUN HYDROPOWER DEVELOPMENT COMPANY

FOR THE

HUBEI GUANGRUN HYDROPOWER DEVELOPMENT PROJECT

October 14, 2020

Energy and Extractives Global Practice

IMPLEMENTATION COMPLETION AND RESULTS REPORT

CONTENTS

ABBREVIATIONS AND ACRONYMS

CBDP	Community Benefit Development Plan
CBP	Community Benefit Plan
CCPG	Central China Power Grid
CDCF	Community Development Carbon Fund
CDM	Clean Development Mechanism
CER	Certified Emission Reduction
DOE	Designated Operational Entity
DSP	Dam Safety Panel
EIRR	Economic Internal Rate of Return
EMP	Environmental Management Plan
ERPA	Emission Reductions Purchase Agreement
FIRR	Financial Internal Rate of Return
GEEDR	Energy and Extractives Global Practice
GHG	Greenhouse Gas
ICR	Implementation Completion and Results Report
O&M	Operation and Maintenance
PAP	Project-Affected Person
PDO	Project Development Objective
PE	Project Entity
PPAR	Project Performance Assessment Report
RAP	Resettlement Action Plan
RCC	Roller-compacted Concrete
SCCFM	Climate Change Fund Management Unit
TA	Technical Assistance
UNFCCC	United Nations Framework Convention on Climate Change

IMPLEMENTATION COMPLETION AND RESULTS REPORT (ICR)
China-CDCF Hubei Guangrun Hydropower Project

1. DATA SHEET

A. Basic Information

Country:	People's Republic of China
Project Name:	CDCF Hubei Guangrun Hydropower Development Project
Project ID:	P094795
ICR Date:	September 30, 2020
Emission Reductions Purchase Agreement (ERPA) volume:	157,745 certified emission reductions (CERs)
Bank/IFC lending or grant (in loan/grant currency):	US$15.97 million
Environmental Category:	A
Project Entity (PE):	Guodian Guangrun Hydropower Development Company Ltd. (GHPDC)
Co-financing:	n.a.
ICR prepared by:	Yanqin Song and Sara Trab Nielsen
Approved by CD:	Martin Raiser
Approved by SM:	Jie Tang

B. Key Dates

China CDCF Hubei Guangrun Hydropower Project - Community Development Carbon Fund (CDCF) ERPA

ERPA signing date	October 27, 2006
ERPA effectiveness date	October 27, 2006
ERPA amendment dates	(1) October 3, 2012 (2) May 18, 2015
ERPA termination date	June 30, 2018
Project commissioning date	Hongwawu I: November 29, 2010 Hongwawu II: September 20, 2009 Zhamushui: August 29, 2012

C. Ratings Summary

Outcomes	U
Bank performance	MS
Project Entity performance	MU

D. Sector and Theme Codes

Sector Codes (in %)

Renewable Energy	100%

Theme Codes (Primary/Secondary)

Climate Change	100%

E. Bank Staff

Position	At ICR
Task Team Leader	Yanqin Song
Deal Manager	Xiaoyu Chang
Legal Counsel	Aristeidis I. Panou
Environmental Specialist	Yongli Wang
Social Specialist	Songling Yao
ICR Primary Author	Sara Trab Nielsen

F. ERPA Emission Reduction Delivery to Date (June 30, 2019)

Table 1. Emission Reduction Delivery

No.	Monitoring Period	ERPA Reporting Period	ERPA Contract CERs (tCO_2e)	Actual CER Delivery (tCO_2e)
1	June 30, 2009–December 31, 2010	June 30, 2009–December 31, 2010	10,391	10,391
2	January 1, 2011–February 28, 2014	January 1, 2011–February 28, 2014	42,383	42,384
3	March 1, 2014–June 30, 2016	March 1, 2014–June 30, 2016	104,970	94,924
	Total		**157,745**	**145,699**

G. Supervision of Carbon Finance Operations Guidelines

1. According to the World Bank Guidelines (Office Memorandum, December 1, 2011), oversight (supervision and monitoring) of Carbon Finance operations should be conducted in two phases: (a) the implementation phase, from effectiveness of the Emission Reductions Purchase Agreement (ERPA) to project implementation completion, and (b) the monitoring phase, from project implementation completion to termination of the ERPA. Between these phases, oversight responsibility is transferred from the Energy and Extractives Global Practice (GEEDR) to the Climate Change Fund Management Unit (SCCFM). Because the project construction activities last until obligations under the ERPA were fulfilled, oversight of the project was never transferred to the SCCFM.

2. The CDCF Hubei Guangrun Hydropower Project (P094795) (the project) is a carbon finance project. It is one of the components of the larger Hubei Hydropower Development in Poor Areas Project (P068049/Loan 4666-CHA) (the loan project). The project was developed as a Clean Development Mechanism (CDM) project activity under the United Nations Framework Convention on Climate Change (UNFCCC).[1] The project is fully operational and able to generate certified emission reductions (CERs). The CER buyer is the Community Development Carbon Fund (CDCF), of which the World Bank is the trustee. This Implementation Completion and Results Report (ICR) mainly summarizes achievements of the carbon finance project; provides

[1] CDM project information is available at https://cdm.unfccc.int/Projects/DB/DNV-CUK1169846013.46/view.

updates of the project's performance, particularly the dam safety- and environment safeguard-related issues; and summarizes lessons learned. For extensive review of the achievements of the loan project, refer to the loan project's ICR, ICR Review, and Project Performance Assessment Report (PPAR).

2. ACHIEVEMENT OF IMPLEMENTATION OBJECTIVES AND OUTCOMES

2.1 Basic Project Description and Summary of Any Significant Changes Since ERPA Signature

Basic Project Description

3. The loan project, as approved by the Board in June 2002, included four components in four poor counties of Hubei Province: (a) Dongping Hydroelectric Power Station (2 × 55 = 110 MW) in Xuan'en County, (b) Najitan Hydroelectric Power Station (3 × 12 = 36 MW) in Laifeng County, (c) Songshuling Hydroelectric Power Station (4 × 12.5 = 50 MW) in Zhushan County, and (d) Xiakou Hydroelectric Power Station (2 × 15 = 30 MW) in Nanzhang County. The total installed capacity of the original loan project is 226 MW.

4. The loan project construction started in August 2002 for the various hydropower components and implementation of the project progressed satisfactorily. Throughout the project implementation, supervision missions have rated the project as either satisfactory or highly satisfactory with regard to implementation progress, safeguard performance, and development objectives. The project implementation was in substantial compliance with the associated Loan Agreement and Project Agreements. Because the actual contract prices were lower than the estimated costs at appraisal for goods and works procured through international competitive bidding due to intense competition and allocations for physical and price contingencies, the loan project enjoyed significant amount of savings.

5. To use the substantial loan savings of about US$16 million, a fifth component (Guangrun component) with the following main activities was added:

(a) Construction of a hydroelectric power station at Hongwawu, Jianshi County, Enshi Prefecture in Hubei Province, including (i) a concrete slab rock-fill dam about 41.5 m high with a crest length of about 458 m; (ii) a first-stage powerhouse with an installed capacity of 8 (2 × 4) MW; (iii) a second-stage powerhouse with an installed capacity of 10 (2 × 4 and 1 × 2) MW; and (iv) a 35 kV transmission line, approximately 4.6 km long, to connect the two powerhouses to Zhamushui step-up substation.

(b) Construction of a hydroelectric power station at Zhamushui, Jianshi County, Enshi Prefecture, in Hubei Province, including (i) a concrete double-curvature arch dam about 77.5 m high with a crest length of about 142 m; (ii) a powerhouse with an installed capacity of 10 (2 × 5) MW; (iii) an associated step-up substation; and (iv) construction of a 110 kV transmission line approximately 12 km long, to connect Zhamushui substation to the electricity grid.

(c) Carrying out of a program of institutional strengthening, including (i) development and implementation of appropriate organizational arrangements, staffing, and

information systems appropriate to the operational phase and (ii) provision of training to the project company staff in project management and hydropower station operation.

(d) Development of a plan for enhancement of poverty alleviation efforts in China to be partially funded from the fiscal revenues accruing to the county because of the project.

(e) Compensation, resettlement, and rehabilitation of project-affected persons (PAPs).

6. This change was approved by the Regional Vice President. The Loan Agreement was amended in July 2006 and a Project Agreement for the new Guangrun component was prepared in January 2007.

7. The total installed capacity of the Guangrun component is 28.4 MW with a total estimated investment of ¥ 276 million (US$33 million[2]). The main purposes of the project are to increase power supply, contribute to poverty alleviation, and enhance the power sector efficiency. At the same time, the project would contribute to water supply and flood control. The loan closing date extension was done in June 2010 to accommodate the implementation delay of the Guangrun component, while the second amendment to the Loan Agreement was done in March 2011 because of a change in the ownership.[3]

8. The two subprojects in the Guangrun component consist of two reservoirs and three power stations, of which Hongwawu phase 2 and phase 1 power stations were commissioned in September 20, 2009, and November 29, 2010, respectively. Zhamushui power station, which is located downstream of the Hongwawu power stations, was commissioned in August 29, 2012. The project subsequently constructed the small 2 × 200 kW Kongzishan power station, which was commissioned on September 25, 2012, to take advantage of the water from the drinking water outlet penstock to compensate for financial losses of the project (see figure 1).

Figure 1. Project Location

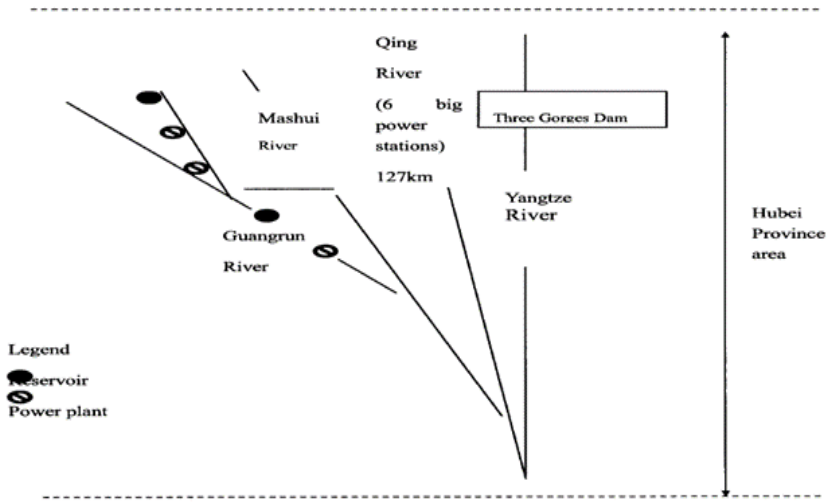

[2] US$1 = ¥ 8.28.

[3] The original project entity (PE), Guoxin Investment Company Ltd., sold its shares to Guodian Hubei Hydropower Development Company Ltd., a branch of one of the big five power generation companies in China, Guodian Group, in 2010.

9. The electricity supplied by the project is sold to the Jianshi electricity grid, which is part of the Hubei Provincial Power Grid and Central China Power Grid. The aim is to reduce greenhouse gas (GHG) emissions generated from the high-growth, coal-dominated power generation and contribute to sustainable development in the region by reducing pollution, creating employment opportunities, and improving the living standards of the local people. On a larger scale, the project assists China in stimulating and accelerating the commercialization of grid-connected renewable energy technologies and markets.

10. The project is in Jianshi County, Enshi Tujia and Miao Minority Autonomous Prefecture, Hubei Province, in China. The Hongwawu hydropower plant is located on the Hongwawu River, a tributary of the Zhamushui River in Jianshi County, about 30 km away from the Jianshi county seat. The Zhamushui hydropower plant is located on the Zhamushui River (upper reaches of the Guangrun River) in Jianshi County, about 3.5 km away from the Jianshi county seat. The original owner of the project was the Hubei Guangrun Hydropower Development Company (Hubei Guangrun). The main shareholder of Hubei Guangrun was the Guoxin Investment Company Ltd. (Guoxin Company), which held 55 percent of the shares. Guoxin Company sold its shares in 2010 to Guodian Hubei Hydropower Development Company Ltd. (Guodian Company), a branch of one of the big five power generation companies in China. The company's name was changed to Guodian Guangrun Hydropower Development Company (Guodian Guangrun) accordingly (see annex A). The deal was sealed in May 2010. The remaining 45 percent of the shares held by the local government was also purchased by Guodian Company in September 2012. Since then the project has been fully owned by Guodian Company.

11. The World Bank was entrusted by the CDCF to purchase the CERs generated from the project. The ERPA was signed on October 27, 2006, and the contract CER volume of ERPA is 485,000. The carbon finance project was registered as a CDM project on April 27, 2007. This ICR mainly focuses on the carbon finance project (P094795) and at the same time updates the status of the Guangrun component of the loan project.

12. Activities (c), (d), and (e) (as mentioned in paragraph 5) were all successfully completed. For activity (d) please refer to annex B of this report, and for activity (e), please refer to annex 6 of the ICR of the loan project.

Project Development Objective (PDO)

13. The PDO of the loan project is to (a) facilitate economic growth in Hubei by expanding electric power generation capacity in an economically and environmentally sustainable manner, (b) enhance the efficiency of the electricity sector in Hubei by commercializing county level power generation companies, and (c) contribute to poverty alleviation efforts in poor communities in Hubei.

14. The carbon finance project is aimed at creating and trading CERs under the CDM by reducing GHG emissions through substitution of electricity generation with renewable hydropower generation. The project represented an improvement over the original four components, as it brought together a series of financial and poverty alleviation instruments to enhance the performance of the project. Through participation in the CDCF, additional revenues

were provided to investors and to poverty alleviation activities (see annex 6 of the ICR of the loan project).

Changes in Project Design since Appraisal

15. The Guangrun component experienced several changes during its implementation.

- **Ownership change.** The main sponsor, Guoxin Company, which held 55 percent of the shares, sold its shares to Guodian Company in May 2010.

- **Closing date extension.** An 18-month extension of the loan was provided to finalize Zhamushui's design and because of unexpected severe weather conditions (snowstorms and floods in 2008). In March 2010, the loan closing date was extended by another 18 months (to December 31, 2011) to remedy the financing gap issue and enable the Zhamushui works to be completed.

16. In addition to the project closing date extension and project ownership change, the project suffered a cost overrun of US$32.86 million because of unexpected geological conditions; price increases (of both labor and raw materials); higher interest during construction; and increased cost of resettlement, which was mostly incurred after the World Bank loan closed in 2011. Consequently, the Guangrun component exceeded its (2006) appraisal estimate by 90 percent, with construction still incomplete. As of December 2019, the following activities remained to be done: (a) for the Zhamushui hydropower station: decision to be taken on the right bank slope treatment and installation of sluice gates for crest spillway[4] and (b) for the Hongwawu hydropower station: construction of two water diversion tunnels and stage two treatment of the reservoir right bank. While the decision on the Zhamushui works was expected to be made in mid-2020, the status of the Hongwawu items remains suspended dependent on the resolution of two water allocation disputes with a neighboring province. The World Bank supervision was extended by two years to accommodate the delay in implementing these activities. But little progress was made in the past year, and the issues related to two power stations are not expected to be resolved soon.

Changes since ERPA Signing

17. The start date of the crediting period was originally defined as July 1, 2008. However, due to delays in implementation of the project, the start date of the crediting period was revised to June 30, 2009, and the end date of the crediting period was June 29, 2016, given the seven-year renewable crediting period. The request for change of the crediting period was submitted and approved by the UNFCCC Secretariat.

18. The ERPA was amended twice: first on October 3, 2012, and subsequently on May 18, 2015. The reporting year periods listed in Schedule 1 to the ERPA needed to be further specified to allow proper monitoring of the emission reductions generated under the project for each reporting year period. In addition, the CER volume was reduced from 485,000 to 249,590 and

[4] During preparation of the ICR, the World Bank was informed that based on the data collected, the right bank is stabilizing, with a limited shift in both X and Y direction, less than 4.9 mm in eight months (July 2019 to March 2020).

finally to 157,745 because of the reduction in electricity generation. Changes related to the deduction of the advance payment and project preparation costs were also made.

2.2 Achievement of Outcomes (Moderately Unsatisfactory for the Loan Project and Moderately Satisfactory for Carbon Finance)

Relevance of PDO

For the Loan Project (High)

19. The PDO of the loan project and the project design were closely aligned with the World Bank's energy sector strategy in China and the three objectives of the Country Assistance Strategy for 2003–2005. The PDO includes: (a) facilitate economic growth in Hubei by expanding electric power generation capacity in an economically and environmentally sustainable manner; (b) enhance the efficiency of the electricity sector in Hubei by commercializing county level generation companies; and (c) contribute to poverty alleviation efforts in poor communities in Hubei. At the time of the project completion, the project in line with one of key five pillars identified in the 2018 China Strategic Country Diagnostic (Report 113092-CN), making fuller use of market mechanisms to promote green growth. China has made strong commitments to fundamentally shift towards a "green growth model". For example, under the 13th FYP (2016 - 2020), China committed to reduce energy intensity by 15 percent from 2015 to 2020. Therefore, the rating of PDO relevance of the loan project is rated 'High'.

20. Lessons learned from previous World Bank-financed hydropower and water resource development projects were considered during project preparation and proved pertinent during implementation.

- Consistency with China's national energy policy and alleviation of power shortage in the local scenario
- Supply of zero-emitting renewable energy to the Hubei Province Power Grid and CCPG, thus decreased environmental pollution caused by fossil fuel-fired plants
- Increased income of local government and residents, thus alleviation of poverty in Enshi Tujia and Miao Minority Autonomous Prefecture
- Improved flood control standards and water supply quality for more than 70,000 people in Jianshi County[5]
- Job generation (more than 1,500 jobs during the construction period and 60 permanent staff positions during operation)
- Improved local transport routes for local villagers and local goods sales

[5] The dam stood strong in the last flood season, which is once in 100 years, and played an important role in flood control to protect the downstream county town.

For the Carbon Finance Project (High)

21. As a renewable energy CDM project, the Guangrun project produces positive environmental and economic benefits and contributes to local sustainable development. Therefore, the rating of PDO relevance of the carbon finance project is 'High'.

22. The specific sustainable development benefits of the project are the following:

- The CER revenue improved the financial performance of the project. Without the compensation of the CDM income, the financial performance of the project would have been worse.

- Implementation of the Community Benefit Development Plan (CBDP) covering construction of the transportation system and irrigation and drinking water system, reparation of buildings for primary schools, education training programs for local villagers, and development of ethnic culture.

Achievement of PDOs

For the Loan Project (Modest)

23. **For the loan project.** At the project design and preparation stage, borrower commitment was high. Risks and mitigation measures were assessed well. But during implementation, various issues such as water resource dispute with neighboring counties in Chongqing, delay in completing the water diversion channel, reservoir leakage in the right bank of Hongwawu, delay in decision-making of enhancement of the right abutment of the Zhamushui dam, and so on jeopardized the construction and operation of the project. As a result, the poverty alleviation, generation company commercialization, and water supply and flood control objectives are substantially achieved. However, the power generation capacity was only achieved at about 50 percent by the end of 2019.

24. Electricity generation in the first three years was low given the delays in the project. When fully commissioned in 2012, electricity generation increased year by year but still remained at only about 50 percent of the expected electricity generation. Between 2012 and 2018, generation capacity saw a steady increase but dropped by 11 percent and 21 percent in 2015 and 2018, respectively, which was primarily because of the significantly low availability of water due to less precipitation.

Table 1. Annual Electricity Generation Compared to Expected Annual Generation at Project Appraisal (that is, 95.66 GWh)

Year	2010	2011	2012	2013	2014	2015	2016	2017	2018	2019
Electricity generation (GWh)	11.44	11.77	11.80	26.51	46.27	36.22	46.39	53.00	33.00	16
% of designated annual electricity generation	13	13	13	27	48	37	48	55	34	17

25. Since commissioning of the project, all drinking water for the county town was supplied from the Zhumushui reservoir. According to the agreement between the county government and

the PE, the county government should pay the PE ¥ 0.41 per m^3 for the water supply service. Each year, the total water supply service fee is about ¥ 12 million.[6]

26. Based on the above discussion, efficacy for the loan project is rated 'Modest'. The operation partly achieved its objectives.

For the Carbon Finance Project (Substantial)

27. The project contributed to poverty alleviation and improved people's living conditions, particularly people affected by the project. The ERPA signed between the CDCF and the Guangrun Company included an advance payment of US$388,000 (¥ 2.44 million in 2006) on the carbon credits to be generated by the project to fund part of a community benefit plan (CBP). The CBPs ought to address poverty alleviation in nine villages affected by the Guangrun component. In addition, 20 percent of the value added tax from the Guangrun component has been allocated to the Jianshi County poverty alleviation fund for six years (2012–2017).

28. Overall, the project has been successful in raising socioeconomic benefits to the local people residing within the boundaries of the project. Activities planned in accordance with the CBP were carried out on time and helped raise employment opportunities and improve living conditions in the area. All the CBP activities supported by the CDCF were completed in early 2011, and an acceptance report was submitted to the World Bank in May 2011 (see annex B).

29. The resettlement of people significantly helped improve living conditions. New housing was of much better quality than the previous housing as the structure changed from brick/stone and wood to concrete and brick. The new housing was also equipped with better infrastructure, such as a water supply and electricity access, and it was located closer to transportation, schools, hospitals, and commercial networks. All the families that were relocated also received a large area of land and mountain forest with much more favorable conditions for agricultural production than before the resettlement.

30. The improved conditions of the directly affected people helped raise per capita income by about 18.37 percent compared to 2007. In addition, the CBP included a few village-level drinking water access projects that reduced the burden of fetching water for household consumption, which was often done by women, walking several hundred meters usually twice or thrice a day, carrying heavy loads of water on their shoulders.

31. So based on the above discussion, the efficacy for the carbon finance project is rated 'Substantial', because the operation almost fully achieved its objectives.

[6] However, the county government never paid the service of water supply. Because of the poor technical and financial performance of the project, the PE stopped paying the World Bank's loan and interests from 2013 (which is about RMB 8 million each year) and the county government paid the World Bank's loan and interests from then, which amounted to RMB 30 million plus as of early 2019.

Efficiency

For the Loan Project (Negligible)

32. During the appraisal stage, the financial return of the project was assessed to be around 7 percent, which was considered low by the team. Seven years after the commissioning of the three power generation stations, due to the low income revenue caused by low generation that resulted from leakage and water resource dispute and high investment capital costs caused by measures taken to address the unexpected leakage issues, the financial return is much lower than the estimate and is in fact a loss[7] (see table 2).

Table 2. FIRR on Total Investment

Items	Unit	Without Income from CERs	Benchmark	With Income from CERs
FIRR on total investment at appraisal	%	5.44	8	7
FIRR on total investment at ICR	%	<0	8	<0

Note: FIRR = Financial internal rate of return.

33. Regarding the economic return, considering the drinking water revenue, local pollution reduction impact, and CO_2 emission reduction impact, the economic internal rate of return (EIRR) of the project varies from negative to positive. Considering other social and environment benefits, including flood control and irrigation, the EIRR may be improved[8] (see table 3).

34. From 2012 to 2017, the project invested US$13 million to address the unforeseen geological challenges, and additional investments are awaiting the resolution of the two water allocation disputes. The World Bank was informed that the project owner will only undertake the additional investments to complete the project and reduce most, if not all, of the generation shortfall, to the extent that it is expecting commensurate with financial returns. Due to the poor performance of the project, Guodian Company has categorized the project as negative assets. Guodian Company is also considering selling the project back to the Jianshi County government. At the time of this ICR, negotiations are under way.

35. It is difficult to calculate the benefits from flood control, irrigation, and poverty alleviation. Given the poor performance in achievements of outcomes in electricity generation and emission reductions generation and the investment efficiency, the achievement of outcomes of the project is rated 'Unsatisfactory'.

36. Table 5.2. (Feed-in Tariff and Sales for Hydropower Components visited by IEG) in the PPAR indicates that the tariff of the five projects remained the same at ¥ 0.367 per kWh, while the average annual electricity generation increased by 17 percent during 2012–2017 compared to 2007–2011. The performance of the Guangrun component is worse than the estimate during this carbon finance project ICR stage (2020) compared to the estimate during appraisal (2006), ICR

[7] The income is half of the appraisal while the investment is twice the estimate of the appraisal. The FIRR is about –3.12 percent.

[8] The World Bank's loan for this component is about 5 percent of the total of the five components. Therefore, the poor performance of this project does not change the overall rating of the investment project, in terms of efficiency (see the PPAR for details).

(2011), and PPAR (2018) . However, high performance of the other original projects compensated the losses caused by Guangrun. Because the installed capacity of Guangrun is only 10 percent of the total installed capacity of the IBRD investment lending project, if half of Guangrun's installed capacity does not function, then the total generation capacity losses would be 5 percent of the total. Therefore, impact of the poor performance of Guangrun on the IBRD investment lending project would be limited to 5 percent. It was expected that the water dispute and leakage issue could have been addressed during 2018–2019. However, because of the complex nature of the issues, the pending activities were not completed at project closure and it may take much longer for Guodian Guangrun to address them.

Table 3. EIRR of Guangrun and Its Impact on the Overall Performance of the Entire Project

	Entire Project	**Dongping**	**Najitan**	**Songshuling**	**Xiakou**	**Guangrun**	**Guangrun**
	ICR at 2012						ICR at 2020
Not including emission benefits (%)	9.5	11.9	10.2	10.7	9.4	2.7	–0.6
Including local emission benefits (%)	11.0	13.4	11.7	12.3	10.9	4.2	0.0
Including local + global benefits (%)	16.0	18.4	16.5	17.2	15.9	9.1	2.7

37. Based on the above discussion, efficiency for the loan project is rated 'Negligible', because efficiency is very low in comparison with both the benefits and recognized norms in the operation's sector.

For Carbon Finance Project (Modest)

38. All the planned CBDP activities were completed and reached the target, contributed to poverty alleviation (see annex B), and improved the economic and financial performance of the project. However, when the project is facing significant operational issues, the carbon credit-based payment cannot sufficiently influence the situation and address the challenges given its result-based nature and size of the funding. Despite the project's timely CDM registration (in 2007) and the World Bank team's diligent follow-up and liaison with key stakeholders, the impact remained limited. As such, the efficiency rating is 'Modest'.

Justification of Overall Outcome Rating

For the Loan Project

39. Based on the abovementioned ratings, the overall outcome rating for the loan project is 'Unsatisfactory'.

Relevance	**Efficacy**	**Efficiency**	**Overall Outcome Rating**
High	Modest	Negligible	Unsatisfactory

For the Carbon Finance Project

40. Based on the abovementioned ratings, the overall outcome rating for the carbon finance project is 'Moderately Satisfactory'.

Relevance	Efficacy	Efficiency	Overall Outcome Rating
High	Substantial	modest	Moderately Satisfactory

Factors That Positively Affected Implementation of the PDO Including Both the Loan Project and the Carbon Finance Project

41. **Carbon finance.** The project successfully applied to the CDM for carbon credits (until June 2016).[9] This generated additional revenues that contributed positively to the company's financial performance and the local banks' willingness to lend to the company. The World Bank's facilitation of access to the CDM funds helped bridge the financing gap, supported the CBDP, and improved the financial return.

42. **Change in shareholders.** The original sponsor, Guoxin Company, sold 55 percent of its shares, and later on the local government sold the remaining 45 percent of the shares, to Guodian Company in May 2010 and September 2012, respectively. The withdrawal of the county and Guoxin Company and their replacement by Guodian Company has substantially strengthened the project companies' technical, managerial, and financial capacity. Therefore, the current negotiation for transferring the ownership back to the local government has raised the World Bank's concern in terms of technical, managerial, and financial sustainability.[10]

43. **Project timing.** The timing of the project, at an early stage of the national government's strong commitment to poverty reduction and power sector reform, which the project supported at the local level with specifically adapted design and implementation assistance, helped elicit the local government's support for the World Bank's involvement in the diagnostic assessment and strengthening of its poverty reduction programs.

44. **Resettlement expertise.** The World Bank's provision of international expertise and experience with resettlement highlighted the need for attention to restoring people's livelihoods through skills training, land-for-land compensation, and improved infrastructure, which made life easier for resettlers and other PAPs and served as a model for other projects.

45. **Low interest rates.** The World Bank's low interest rates in relation to other sources of finance made the project company eager to follow the World Bank's recommendations and requirements on corporate organization and governance; procurement practices; and implementation of financial, operational, and environmental management systems and indicators.

Factors That Negatively Affected Implementation of the PDO Including Both the Loan Project and Carbon Finance Project

46. Multiple years of delay in commissioning (which was not fully completed as of December 2019) and electricity generation losses due to low water resource availability and leakage in reservoir had a negative impact on the financial performance of the project company.

[9] The PE indicated that it does not intend to renew the crediting period after the first seven-year crediting period has lapsed.

[10] The current resolution under negotiation is that the staff and assets will be purchased by the new owner, which will ensure the technical and managerial sustainability.

47. Procurement of the main civil works contract for the Zhamushui dam and powerhouse had to be cancelled because it could not be concluded within the bid validity period.

48. Guoxin, a trading company, has weak technical and managerial capacity for planning, building, and operating such a project. It relied on outside experts and consultants for the technical work and was short of staff to manage the design and execution of the two hydropower stations (Hongwawu and Zhamushui) in the Guangrun watershed.

49. The Jianshi county government failed to provide the financial support that was agreed at appraisal in 2005. This issue was only resolved when Guodian Company became the principal shareholder of the company in 2010.

50. The Hongwawu reservoir and two powerhouses were completed and commissioned in 2009 and 2010, respectively. Soon after that leakage was found in the right abutment and reservoir bed, because of the insufficient prefeasibility stage geological investigation. The leakage has only been partially treated. This increased the shortfall of the water resources caused by the unresolved water dispute with neighboring counties in Chongqing. The Zhamushui dam also faced technical difficulties, with two faults and one fracture zone discovered in the left abutment during excavation and falling rock in the right abutment during operation. The faults and fracture in the left abutment were properly addressed by cement injection, while the decision on falling rock area treatment has been pending since 2017. Although it was partially commissioned in 2012, the construction of two diversion channels for Hongwawu and the installation of flood discharge gates at Zhamushui were not completed. Because of the incomplete construction of these two hydropower stations, their power generation has only reached about half of the design level, resulting in a deteriorating financial position for the Guangrun hydropower company.

51. The construction and completion of two water diversion tunnels linked to the Hongwawu reservoir (which is upstream of the Zhamushui reservoir) has been stopped because of a water allocation dispute. Resolution of this dispute has been provided by the Ministry of Water Resources through arbitration, while implementation of the resolution still needs cooperation between the county governments from both sides.

Generation of Emission Reductions (Satisfactory)

52. The generation of emission reductions is rated Satisfactory. The overall CERs delivered (June 2009–June 2016) are 145,699 tCO_2e in accordance with the three monitoring reports. This represents 92 percent of the 157,745 CERs expected according to the amended ERPA, following the CER reductions in two ERPA amendments, supposed to be rated Highly Satisfactory. However, it is only 30 percent of the initial estimates from the feasibility study. According to the original ERPA, the emission reductions of the project after the implementation of all three stations with the capacity of 28.4 MW should be 70,000 tCO_2e per year (see table 4).Therefore, taking the final results and the history of the project performance, the Generation of Emission Reductions was rated Satisfactory.

Table 4. Contracted CERs According to the Amended ERPA and Actual CER Generation to Date According to Monitoring Reports (CERs, tCO_2e)

Reporting Year	Original ERPA	ERPA First Amendment	ERPA Second Amendment	CERs Generated
2008	12,000	—	—	—
2009	55,000	—	—	—
2010	68,000	10,603	10,391	10,391
2012	70,000	10,987	20,053	42,384
2013	70,000	57,000	13,369	
2014	70,000	57,000	8,961	
2015	70,000	57,000	58,750	92,924
2016	—	—	46,220	
Total	—	—	157,745	145,699

53. The various issues and delays encountered resulted in much lower power generation than expected at appraisal, and the initially expected emission reductions were therefore not realized.

2.3 Monitoring, Reporting, Verification, and Issuance of Emission Reductions for the Carbon Finance Project

54. The monitoring plan states the roles and responsibilities of persons involved in the monitoring of grid connected electricity generation by the project. The management structure includes (a) a general manager responsible for supervising the whole monitoring procedure, (b) monitoring staff responsible for collecting data and internal auditing, and (c) verification staff responsible for collection of sales receipts. When error happens, an error handling procedure is followed as it is required in the 'CDM Project Management and Operating Procedures' by the PE.

55. The project activity uses the approved CDM baseline methodology ACM0002 (version 6) 'consolidated baseline methodology for grid-connected electricity generation from renewable sources' and the approved monitoring methodology ACM002 'consolidated monitoring methodology for zero emissions grid connected electricity generation from renewable sources'. In accordance with the monitoring methodology ACM0002, Version 6, the key data that must be monitored ex post for the specific crediting period (because the emission factor has been calculated ex ante), are

(a) The electricity supplied to the grid by the project activity and

(b) Surface area at full reservoir level.

Calculating Electricity Supplied to the Grid

56. To measure the net electricity supplied to the grid by the project, three meters were installed: (a) a primary meter (M1) is at Jianshi substation with an accuracy of 0.2 s; (b) a backup meter (M2), in case of failure of the primary meter, is at Hongwawu II substation with an accuracy of 0.5 s; and finally, (c) a meter (M3) is installed at Zhamushui substation. The meters measure the electricity supply on a continuous basis, but M2 and M3 are not being used in calculating emission reductions.

57. To supply electricity to the plant in emergency cases when the main power line fails to supply power, a 10 kV backup line at each plant has been installed. Meters M4, M5, and M6 are installed to measure the electricity imported from the grid through these lines. These meters are owned, maintained, and read by the grid company. The accuracy and calibration of M4, M5, and M6 are in compliance with related national standards DL/T448-2000, and calibration reports are supplied to the designated operational entity (DOE) for calculation of CERs. During the monitoring periods, there has been no import of electricity through the backup lines.

58. Electricity supplied to the grid by the project is calculated as electricity exported to the grid by the project minus electricity imported from the grid through the main line and electricity imported from the grid through backup lines. Meter readings of electricity exported to the grid by the project and electricity imported from the grid through the main line are cross-checked by their own corresponding sales receipts to ensure the conservativeness of emission reductions calculation. Values from the sales receipts of electricity imported from the grid through backup lines are used for emission reductions calculation as only the grid company has access to the meters and it is not likely to underestimate the electricity sold to the project company.

Figure 2. Configuration of the Meters

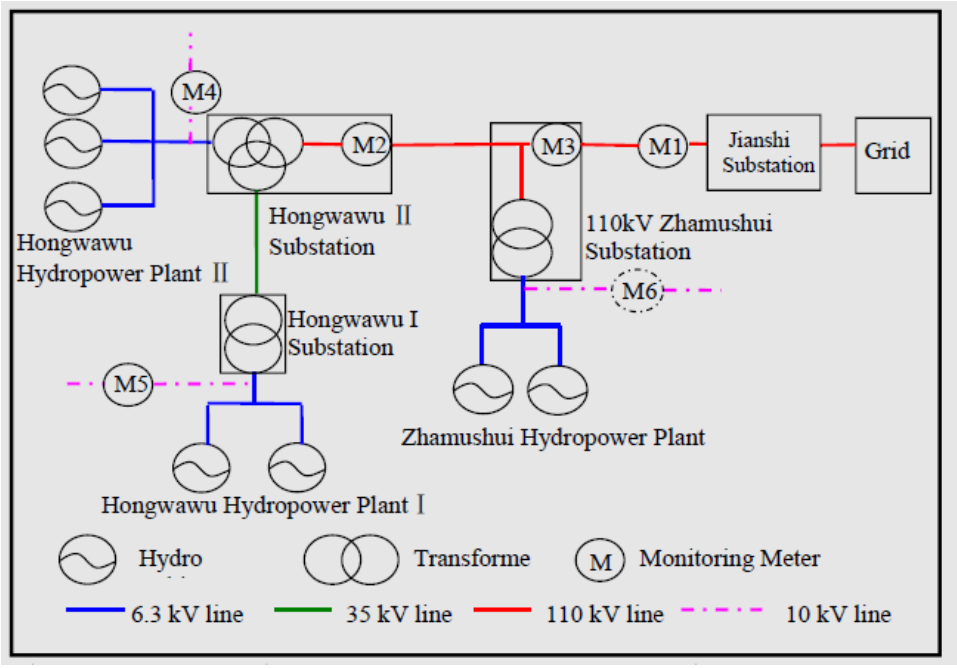

59. The amount of electricity that has been delivered by the project to the electricity grid is recorded every month jointly by the PE and the Jianshi Electric Power Company. The PE and the Jianshi Electric Power Company jointly identify the exact points at which the amount of electricity delivered to the electricity grid will be measured. After that, the Jianshi Electric Power Company pays the project company within a certain period based on the monthly meter readings and the PE provides a corresponding receipt. The metering equipment is calibrated annually by the Jianshi Electric Power Company according to the power purchase agreement.

Surface Area at Full Reservoir Level

60. The PE has hired an independent consulting company (Hubei Institute of Survey and Design for Water Resources and Water Power Engineering) to measure the surface area at full reservoir level at the start of the project.

61. Since project registration on April 27, 2007, the project has achieved three successful verifications, totaling 145,699 CERs (excluding 2 percent share of proceeds). During the verification site visit for the second verification, the DOE identified a change in the project design (at the time of registration). The change involved a small 2 ×200 kW Kongzishan power station, which was commissioned on September 25, 2012, to take advantage of the water from the drinking water outlet penstock to compensate for the financial losses of the project. A post-registration change was thus carried out to demonstrate the additionality with the change and subsequently approved by the UNFCCC Executive Board on February 26, 2015.

62. The third and last verification was done in September 2016 and covered the monitoring period March 1, 2014–June 30, 2016. Since the auditing firm who conducted the previous verifications exited the market, a new firm was hired to carry out the third verification.

3. BANK AND PROJECT ENTITY PERFORMANCE

3.1 Assessment and Rating of Overall Bank Performance (Moderately Satisfactory)

Quality at Entry

63. The initial project sponsor's weak managerial and technical capacity, and lack of experience with hydropower projects, do not appear to have been adequately appraised and addressed, which may have contributed to the inadequate geological investigations and technical design challenges that have prevented its completion to date. However, the World Bank's facilitation of follow-on carbon financing improved the financial performance and enabled it to continue supervising the project, with the expectation that it will be completed when the ownership issue was properly addressed, now committed as around 2023 (see annex D).

64. The following critical risks were not adequately considered during design and appraisal. First, the main project sponsor, Guoxin, was principally a trading company with no experience with small hydropower plant construction and operation. A more comprehensive technical assistance (TA) program could have been devised to remedy Guoxin's technical and managerial shortcomings. Second, thorough investigations were not carried out in the Hongwawu reservoir site to assess the possible presence of Karst caves (formed by underground water flows in limestone areas) that can cause water to leak from the reservoir. These risks were not considered even though the feasibility study report and preliminary designs were prepared by the same design institute that prepared the original four components and the panel of experts reviewed the preparation of this project and was consulted by the World Bank on technical aspects.

65. Following project closure in 2011, the World Bank has continued to monitor the implementation of the Guangrun component, about twice a year, as part of the supervision of the follow-on Guangrun CDCF project.

66. The county government failed to provide the financial support that was agreed at appraisal in 2005. This issue was resolved only when Guodian Company became the principal shareholder of the company in 2010 and full owner of the company in 2012.

67. As summarized earlier, the rigorous quality and depth of appraisal for implementing agencies needs to be maintained for the Guangrun project. The design of the project was an improvement over the original four components of the loan project and it was fully appraised. It could have been an effective way of using loan savings to enhance the achievement of project objectives as anticipated. However, the following risks were not identified and managed:

- Guoxin Company was a trading company with no experience in small hydropower plant construction and operation. A possible TA program could have been devised to remedy Guoxin's technical and managerial weaknesses.

- Thorough investigations were not conducted to assess the geological issues at the two project activity sites. It should be noted that the feasibility study and preliminary designs were prepared by the same design institute that prepared the original four components and the PE reviewed the preparation of this component and was consulted by the World Bank on technical aspects.

Quality of Supervision

68. During the project duration, supervision was planned and carried out approximately twice a year. The supervision teams were appropriately staffed to address and report on implementation issues as they emerged. Early supervision focused on procurement, which was critical for implementation. Subsequent supervisions monitored the various technical issues related to construction, installation, testing and commissioning, and quality of work and kept close tabs on remedial actions taken by suppliers and contractors. The focus on development impact throughout supervision was also good.

69. The World Bank monitored implementation of the Resettlement Action Plan (RAP) and Environmental Management Plan (EMP) regularly and compliance with World Bank fiduciary and safeguards policies. Supervision missions regularly reviewed the financial statements and audit reports of the implementing agencies. Discussions covered issues such as disbursements, tariffs, financial projections, and compliance with financial covenants.

70. The World Bank team paid close attention to the geological, environmental, and political issues that arose during implementation; offered guidance; and continuously encouraged the PE to solve issues promptly to not cause further delays in project implementation and realize the full capacity of the two project activity sites.

71. The supervision continued when the loan project was closed in 2011, taking advantage of the carbon finance activities, which lasted until the end of 2019, as committed in the loan project ICR. The supervision focused on the environment safeguards compliance and dam safety issues.

72. Eight years after project closure in 2011, the World Bank team confirmed that the project companies continue to track and maintain comprehensive records of their financial and operational performance and monitor the environmental and safety indicators. The World Bank team also

confirmed that the poverty alleviation program continued to be supervised after project closure—the 2005–2019 Guangrun CBDP funded by CDCF—had been fully reported and accounted for in late 2019.

73. As in the other components of the loan project, the earmarked poverty alleviation fund and the 20 percent of the local value added tax generated from electricity generation of the project was subsumed into a much larger flow of poverty alleviation and infrastructure development programs mainly funded by the central government. The county governments also reported that the poverty indicators introduced by the project had been superseded by the results framework used to track the achievement of national poverty alleviation targets. These indicators, including infrastructure access, income stability, health and education status, housing conditions, and so on, were fully consistent with the objectives of the project-supported strengthening of the county-level poverty monitoring framework.

74. Based on the discussion above, the rating of overall World Bank performance is Moderately Satisfactory.

3.2 Assessment and Rating of Overall Project Entity Performance (Moderately Satisfactory)

75. Overall performance of the PE has been moderately satisfactory. Collaboration with the World Bank and the community has generally been smooth. The World Bank assessed that the PE took unexpected issues seriously and efficiently implemented measures to investigate issues, such as cracks, and seal them to address dam safety and poor geological conditions. To accommodate the additional necessary investment, the PE took measures to request tariff increases, which did not work out.

76. However, several deadlines regarding the final demands for satisfying the World Bank safeguards related to dam safety were not met at project closure. The decision on whether it is necessary to carry out the treatment of the right abutment at the Zhamushui dam has been pending for four years. In addition, at the time of the ICR there is no time line for the second treatment of leakage at Hongwawu. At the ICR stage, a brief ‘Dam Safety Panel Working’ report was submitted to the World Bank. The World Bank team provided comments for the PE to improve, and the PE is committed to improve the quality of the report in the future accordingly.

77. Based on the discussion above, considering the good performance of the CBDP program, the rating of overall PE performance is ‘Moderately Satisfactory’.

4. COMMENTS FROM PROJECT ENTITY AND OTHER PARTNERS

78. Not applicable.

5. JUSTIFICATION FOR MOVING TO THE SECOND PHASE (CARBON FINANCE MONITORING PHASE) AND SAFEGUARDS COMPLIANCE

5.1 Compliance with Safeguards and Implementation Challenges in the First Phase - Supervision Phase

79. The project triggered four safeguard policies: (a) Environmental Assessment (OP/BP 4.01), (b) Natural Habitats (OP/BP 4.04), (c) Involuntary Settlement (OP/BP 4.12), and (d) Safety of Dams (OP/BP 4.37). During appraisal, suitable measures were taken, where necessary, to mitigate these safeguard issues.[11]

Environmental

80. The PE prepared an Environmental Impact Assessment, and an EMP which were cleared by the World Bank in March 2006. In addition, retaining walls were constructed, and restoration of vegetation took place in an efficient manner on the surface of spoil disposal sites and to avoid soil erosion. A sedimentation tank was built at Hongwawu to help treat wastewater as the secondary stage powerhouse was located only 200 m upstream from the drinking water source Class II protection area. Monitoring reports show that the water quality, both upstream and downstream of Hongwawu, meets Class II standards (GB3838-2002).

81. However, the project experienced several environmental and geological issues related to safeguards.

- **Leakage at Hongwawu.** During implementation, significant leakage was discovered in the right bank of the Hongwawu dam. Though it was delayed, the first stage of leakage treatment was completed on August 31, 2013. At the time of the ICR, the second stage of leakage treatment had not begun. Due to the high cost of the second stage of leakage treatment, the PE may only consider it when the water resource dispute is properly addressed. Otherwise, the low waterhead may not need the second stage treatment.

- **Silting from coal mines upstream.** During implementation, the team also discovered that tailings from small coal mining upstream of Hongwawu were washed into the reservoir and resulted in silting. The mines are beyond the control of the PE. Given that Guangrun River is the source of water supply for the Jianshi county seat, it is in the interest of the county government to effectively prevent tailings and associated acidic pollution from contaminating the reservoir and the Guangrun River at large. The resolution would be the installation of additional retaining walls.

[11] The Guangrun component is in Enshi Tujia and Miao Autonomous Prefecture, which, at its request, was designated as such in 1982. Despite the presence of officially designated minorities in the project area, the social and economic survey carried out as part of the resettlement planning process indicated a high degree of acculturation within project counties in affected communities. Following review and discussion of the Social Assessment and mission reports at the appraisal stage, it was agreed that the people within the project area were not the intended targets of OP/BP 4.20 (Indigenous Peoples) and that an Indigenous Peoples Development Plan was not required.

Natural Habitats

82. The safeguard on natural habitats has been satisfied, and there are no outstanding issues. The PE agreed to undertake two separate surveys, a Fish Survey and a Cave Survey, to confirm that the designed mitigation measures for biodiversity in the river ecosystem and the Karst area were adequate.

Safety of Dams

83. The project has experienced several issues with dam safety:

- **Dam Safety Panel (DSP).** As discussed earlier, the original panel of experts of the loan project reviewed the preparation of this project component and the idea was that the same panel of experts would continue to work on this project as well. But because of the delay of in implementation, some members of the original panel were no longer available when the project resumed implementation. Hence, a new DSP was appointed and approved by the World Bank on May 13, 2012. However, it was not closely involved in the technical demonstration and expert consultation regarding dam safety. A DSP report was requested to be submitted to the World Bank by May 2016. However, as of January 2019, this report was still incomplete. After numerous reminders, the DSP produced a report on dam safety, which was submitted to the World Bank in May 2019 (see annex C).

- **Dam monitoring system and instrumentation.** Dam monitoring system and instrumentation were requested to be installed to ensure the safety of the dams. At Zhamushui, the monitoring system and instrumentation were installed and are operational. However, at Hongwawu, while the dam safety monitoring device was installed, the monitoring system that monitors dam movement and activity was not implemented. This significantly restricts the information that the PE can obtain and jeopardizes dam safety. At present, while water in the Hongwawu reservoir is still low, it does not pose a significant risk, but if disputes with neighboring counties are resolved and the water level rises, issues may arise.

- **Treatment of abutment at the Zhamushui dam.** The treatment of the left abutment was completed, but the decision on the treatment of the right abutment remains unclear. If the reservoir comes up to full capacity, non-treatment may have detrimental impacts on the safety of the dam as it may not be able to hold additional pressure from the water.

84. The following reports have been submitted to the World Bank and were found to be satisfactory: Operations and Maintenance Plan, Construction Supervision and Quality Assurance Report, Dam Monitoring Systems and Instrumentation, and the Emergency Preparedness Plan.

Resettlement

85. The PE prepared a RAP, which was approved in March 2006. All resettlement is finalized, PAPs have been compensated, and the safeguard on resettlement has been satisfied. An

information booklet was created to inform PAPs about resettlement policies and compensation rates. Although distribution of the booklet was slightly delayed, it was fully completed by 2011. Overall a total of 164.5 ha of land was occupied, of which 2.5 ha was occupied temporarily for construction. A total of 2,185 m^2 of housing was demolished.

86. Resettlement work at Hongwawu was completed by July 31, 2010. However, at Zhamushui, resettlement work was continuously postponed as price levels and other relative conditions changed. In 2011, the Jianshi county government submitted a report asking for adjustments in the resettlement compensation rates for the land acquired, which was approved in October 2011. By November 2011, seven families at the dam area and six families in the reservoir area were relocated. There were still 15 families in the reservoir area that had only finished consultations but had not relocated. Their relocation took place in mid-June 2012. Compensation for land acquisition was completed in 2012, where resettlement documents and payment proofs were delivered to the World Bank. Early delays were due to contingency land occupation during project construction, and it was hard to organize payments.

87. Despite delays, resettlement was completed successfully according to the Resettlement Independent Monitoring Group, which was hired to help with and speed up resettlement.

88. The project was to treat resettlement arising from the subprojects as a development opportunity to improve the living standards of the affected population. PAPs were largely satisfied with the resettlement and compensations. Their living conditions in terms of income level and quality of life were substantially improved.

5.2 Project Entity's Capacity to Carry Out Key Functions Related to Safeguard Requirements

89. Guodian Company is one of the five large state-owned power generation companies and has strong technical and financial capacity. If it was not Guodian Company, but the original owner, the project would have stopped in the middle of construction. The project is facing significant challenges in water resource availability, leakage treatment, drinking water supply dispute, and investment cost overrun. But if those issues can be resolved to some extent and some beneficial policies can be offered, there is still a chance that the project can make a profit and therefore become technically and financially sustainable. But now Guodian Company is considering selling the project to Jianshi County. This has raised the World Bank's concerns in terms of whether Jianshi County has relevant experience and sufficient capacity to operate this type of project. The resolution under negotiation is that the staff, including management and operations, and assets, including physical facilities, machinery, and equipment, will be shifted to Jianshi County together if the deal is made. This to some extent can ensure technical sustainability of the project.

5.3 Potential Issues in Post-completion Operation, Including the Project Entity's Capacity and Ability of the Project to Deliver the Contracted Emission Reductions

90. The contracted emission reductions have been delivered. However, the World Bank team is concerned with sustainability of the project because of the following reasons:

(a) Outstanding issues with World Bank safeguards procedures

(i) **Environmental.** As mentioned earlier, the second stage of the leakage treatment has not commenced. The PE sees no reason to start this treatment unless the water disputes are resolved as the leakage will not have a significant impact if water levels remain low. The PE plans to commence the second treatment when the water dispute over the Qilibian water diversion tunnels comes out in their favor. It deserves to be mentioned though, that at present during monsoon season, water levels can rise to about 4 m above the current leakage treatment, and the PE has thus been encouraged to continue the leakage treatment as soon as possible. In addition, the issue regarding siltation from the tailings of coal mines upstream at Hongwawu remains and must be resolved so it does not affect dam performance and water quality. The resolution would be the installation of additional retaining walls.

(ii) **Dam safety.** The non-treatment of the right abutment at the Zhamushui dam is of significant concern to the World Bank team as the dam is so close to the county town. Guangrun was urged to carry out the dam safety acceptance as soon as possible and monitor the dam safety situation following the standards and regulations and ensure the safety of the dam.

(b) **Water resource disputes.** The water resource disputes are still outstanding. While the PE has decided to abandon the dispute for the Dongpiaohe tunnel, the resolution over the dispute for the Qilibian tunnel has been provided by the Ministry of Water Resources through arbitration, but enforcement of the arbitration still needs further cooperation between the governments of the concerned counties.

(c) **Financial sustainability of project and loan repayment.** The World Bank team is concerned about the timeliness of loan repayment. At present, ¥ 30 million has been repaid directly from the PE, and another ¥ 30 million has been repaid to the World Bank, but through the financial bureau. The PE will have to repay the financial bureau in addition to repaying the final ¥ 40 million to the World Bank.

(d) An agreement was reached between Guodian Guangrun and the Jianshi county government that Jianshi county government will pay the drinking water service fee. Guodian Guangrun will pay the county government (financial bureau) for the World Bank loan. However, since 2013, the county government has not paid the drinking water service fee and the county government has not received repayment from Guodian Guangrun for the World Bank loan. Both are around US$1.3 million per year.

5.4 Justification for Moving to the Second Phase - Carbon Finance Monitoring Phase

91. Because all three verifications were completed and emission reduction payments were made to the PE in full, the project is considered complete from the carbon finance perspective and was terminated by June 30, 2018, with provision of the fulfillment letter by the SCCFM. However, because of outstanding issues, the World Bank team was requested to extend the supervision time following the request from the management to ensure that the dam safety issues were properly dealt with. Now that the resolution of the water resource issue is available and the project is formally closed in the portal, the World Bank team considers closing the project with this ICR.

5.5. Lessons Learned

92. Among the many factors that contributed to the project's outcomes, several lessons can be highlighted:

- Small-to-medium hydropower projects located in poor counties can be designed as holistic county development projects. This project is a good example of what can be accomplished and the tools that can be developed, particularly the CBDP program:
    - Resettlement arising from such projects can be treated as a development opportunity to improve the living standards of affected populations.
    - Significant tax revenues can accrue to the county, provincial, and national governments and constitute additional resources for supporting development programs.
    - Benefit sharing schemes can be designed to increase the financing of county-level poverty alleviation efforts by earmarking part of the fiscal revenues accruing to the counties.
    - Financial tools like the CDCF can be used to combine environmental and social development objectives, and thus constitute a 'carbon reduction plus development' approach.
    - Such projects can generate other economic benefits in the counties, for example, road improvements, new jobs during the construction and operation periods, several multipurpose benefits of the dams, and so on.
    - TA activities under the project can enhance county poverty alleviation planning.
    - However, carbon finance by design is a results-based mechanism, its incentive effect is limited when project implementation runs into difficulties like Guangrun has experienced.
- In hydropower projects, like this one, discussions should be carried out with neighboring counties to reach an agreement on water rights before construction. This would alleviate any water disputes that may arise due to the implementation of similar projects.

93. Overall, to achieve the full benefits of small hydropower project development and prevent the occurrence of major delays and issues that put the project at risk, the following factors should be assessed by the World Bank at the appraisal stage and ensured throughout the implementation stage:

- Strong support from the government (local and provincial) to the project and full commitment to the implementation arrangements agreed with the World Bank at appraisal. Ensure alignment of the interests of the project entities/stakeholders and establish the necessary incentive mechanisms for the project entities/stakeholders to

ensure that all parties (project entities/stakeholders) meet the required responsibilities, which is critical for successful project implementation.

- An implementing agency with good financial, technical, and managerial capacity. An assessment of the proposed implementing agency's capacity on these three points at the appraisal stage is crucial. Financial capacity and interest in the project alone are not sufficient. If a new component is to be carried out by an implementing agency with weak technical and managerial capacity, a TA program should be included to address these weaknesses.

- Sufficient geological investigations should be carried out during the preparation stage to ensure proper site selection. The two sites in this project experienced such significant geological issues that the success of the outcomes was considerably lowered. Proper geological investigations and inclusion of technical experts could help determine better site selection.

- Inclusion of neighboring counties in the design of the project to ensure their collaboration on water rights. The water disputes with neighboring counties in this project had a major impact on the water level of the Hongwawu reservoir and thereby significantly affected the generation of electricity. If proper investigation is done on water resources before site selection, an agreement could be reached during project design.

- The rigorous quality and depth of appraisal for implementing agencies needs to be maintained throughout the project cycle, including project components that are added later. In this project, it soon became clear that the Guoxin Company, which joined the project in 2005 (four years after appraisal), did not have adequate technical and managerial capacity to undertake the technically more complex Guangrun component compared to the four original sponsors. This appears to have contributed to the inadequate geological investigations for the Hongwawu reservoir and the insufficient early-stage assessment of technical issues faced by the Zhamushui dam.

5.6 Recommendations and Guidance for Project Monitoring in the Second Phase - Carbon Finance Monitoring Phase

94. As mentioned earlier, the project did not move to the second phase because all CERs were delivered and the World Bank's further involvement would not add much value to address the remaining issues related to water resources dispute. Following the procedure, this project would be handed over to the PE.

ANNEX A: DETAILS ON PROJECT COMPANY AND CHANGE IN SHAREHOLDER

1. On March 21, 2005, Jianshi Guangrun Power Development Company Ltd was formed in Hubei Province with capital contributions from Hubei Guoxin Investment Company Ltd (55 percent), Enshi Prefecture Power Company (5 percent), and Jianshi County Power Company (40 percent). The registered capital was ¥ 66 million. Under the leadership of the Board of Directors, the company was managed by a general manager and comprised four departments: the General Department, Financial Department, Engineering Department, and Resettlement and Environmental Protection Department. On May 11, 2010, Guodian Hubei Hydropower Development Company Ltd (owned by China Guodian Company) acquired all the shares held by Hubei Guoxin Investment Company Ltd (55 percent), the project company's controlling shareholder. The registered capital was still ¥ 66 million and the ownership structure of the two other shareholders remained unchanged. On June 24, 2010, the company changed its name to Guodian Guangrun Hydropower Development Company Ltd. In October 2010, the company's senior management personnel and institutional adjustment was completed. The general manager is Mr. Shao Minghua. Later, in September 2012, the local government also sold the remaining 45 percent of the share of the project to Guodian Hubei Hydropower Development Company Ltd.

ANNEX B: FINAL OVERVIEW OF THE COMMUNITY BENEFIT DEVELOPMENT PLAN

Conclusion of the Result-Based Evaluation

1. The main objectives of the Guangrun CBDP financed by the CDCF are to improve the living standards of villagers in the project-affected areas and to enhance the positive development impact that goes hand in hand with the Guangrun Hydropower Project and at the same time minimizes and/or eliminates negative impact that also goes hand in hand with the project during and after the Guangrun Hydropower project is completed. To fulfill these main objectives, the CBDP focuses on improving (a) infrastructure especially road and water supply, (b) irrigation, (c) education and community health services, (d) agricultural extension (introducing new agricultural techniques and practices, and (e) labor training. Each of the projects under the plan is designed and developed for specific villages based on the needs of each village. The results-based evaluation presented in this report confirms that the ethnic minorities development plan has been properly and successfully executed in the nine targeted villages and meet the objectives. The project results/outcomes have reached the intended target population. However, the number of households that have benefitted directly from the water supply project in Tianjiaping village is lower than in the plan.

2. In Tianjiaping village, the study team finds that the project has tried to extend the water supply coverage beyond the budget. Many villagers who already have water piped into their home from the water source in the mountain or do not face extreme hardship in accessing water supply expected the project to help improve their access to water supply. However, when they saw that the project resources were stretched too thin and foresaw that the quality of services may not be better than what they have had, several households withdrew their support for the project. Except for the shortfall in Tianjiaping village, the water supply projects—in three villages—have eliminated the hardship and saved time for fetching water, which falls mostly on women.

3. Road access improvement projects implemented in six villages have provided significant positive results. The survey confirms that traveling by automobile and motorcycle or even on foot is now much more convenient than before. Travel time to other villages and especially to the town or county center has significantly reduced. Furthermore, bus service has also improved; currently more buses are available and in most cases at lower fare than before. With improved road access, there has been more travel by middlemen to the village to buy agricultural products as well.

4. The rehabilitation of Qilingping has also produced positive results. It is important to note that this irrigation project does not help increase agricultural outputs, because the existing irrigation channel was not in good working condition. The irrigation channel leaks needed constant attention and repair. The project financed by the CDCF has effectively eliminated these problems and thus the tasks of repairing and maintaining the irrigation channel. Moreover, due to the leakage of water from the delivery system of the irrigation channel, villagers had to fight for water. However, since the project completion, there has been sufficient water for everyone.

5. The agricultural extension project which focuses on introducing new agricultural techniques and practices has also attracted a large number of villagers. Based on in-depth interviews with villagers, village cadres, and the village head, it appears that the vast majority of

villagers adopted the techniques learned from the training. Many villagers interviewed also confirmed that the yields have increased. The study team was unable to find persons who attended the labor training for interviews to effectively evaluate the results. Based on limited information and casual observation, it appears that the labor training produces mixed results. Several labor trainings appear to be on coal mine safety, and working in the coal mine is not a job that many workers would like to do. In addition, many villagers who intend to seek employment in the cities cannot foresee what type of work they will be doing. As a result, there is not much interest.

Table B.1. Summary of the CBDP Activities in Guangrun Subproject in Jianshi County

Components	Activities
1. Improving basic infrastructure services	Road and drinking water access projects benefiting 11,042 residents in project-affected areas
2. Promoting the development of health care and community education	An elementary school to be renovated and village clinics to be built to provide training on pandemic disease prevention, targeting 14,007 local residents
3. Strengthening the productive skills of community residents	Training to increase agricultural productivity and pig farming to be delivered to 3,000 community residents in project-affected areas
4. Providing short-term employment opportunities to residents	Some 120 community residents to be hired during project construction
5. Promoting the development of tourism and catering services	Tourism services to be provided by 2,173 community residents putting into profit the attractive reservoir area created by the project
6. Promoting ethnic minorities' culture and folklore	Support the construction of an ethnic minority (Tujia minority) cultural museum for the 509,000 residents of Jianshi County

6. A team of consultants hired by the World Bank to evaluate the implementation of the CBDP produced an assessment report 'Results-Based Evaluation Report of the Guangrun Community Benefit Development Plan (CBDP)'. The World Bank concluded in 2008 that the implementation of the CBDP was **highly satisfactory.** The impressive progress achieved was partially due to the availability of required funds and to the strong commitment of the local government and the Guangrun Company. The local government had made substantial counterpart fund contributions to the preparation and implementation of the activities, which showed strong ownership for the CBDP.

ANNEX C. PANEL OF EXPERTS' REPORT ON DAM SAFETY

World Bank Loan - Hubei Guangrun Hydropower Project

Names and Bios of DSP Experts

Jianshi County, Hubei Province

1. Mr. Wang Yuzhang, 61 years old, is a senior engineer and senior professional and technical expert in water projects survey, planning, design, construction, management, and scientific research, with 40 years of experience in water conservancy and hydropower project design, construction, and supervision. Mr. Wang has an educational background in water conservancy and hydropower projects from the School of Water Conservancy and Hydropower, Wuhan University.

2. Mr. Zhu Mingcai, 60 years old, is a senior engineer, specialized in hydro project planning, design, and management, with 40 years of experience in water conservancy and hydropower projects, and has received many awards at provincial and ministerial levels. In 2008, he won the special prize of 'The World Major Academic Achievement' for his research paper 'The Treatment of the Geological Defect on the Left Abutment of the Double Curvature Dam in Jiaobahe Secondary Power Plant'. Mr. Zhu has a background in agricultural hydro project, from the School of Water Conservancy and Hydropower, Wuhan University.

3. Mr. Wang Changyun, 47 years old, is a senior engineer, senior engineering, and technical professional with multiple competencies specialized in survey, planning and design, prediction, management, and scientific research, in the areas of hydrology, hydropower development, water environment governance, and water ecology protection. Mr. Wang has a background in hydrology and water resource engineering from the School of Water Conservancy and Hydropower, Wuhan University. Mr. Wang has 25 years of experience in water conservancy and hydropower project design, construction, and supervision.

1. Project Description

1.1 Background

4. The Guangrun Hydropower Project is a reconstruction project for the Qingjiang Shuibuya Hydropower Project and the World Bank loan project for poverty alleviation, located in the Guangrun river basin in the northwest of Jianshi County and built with the main objectives of urban water supply and flood prevention, combining other functions including power generation and irrigation.

1.2 Project Area

5. The Guangrun Hydropower Project is located in the upstream of Guangrun River, Yezhou Town, Jianshi County. The main part of the project is composed of two reservoirs, three power stations, and small substations, including the Hongwawu reservoir which has a storage capacity of 4.981 million m^3 and installed capacity of 8,000 kW in primary power stations and 10,000 kW in secondary stations and Zhamushui reservoir with a storage capacity of 20.01 million m^3 and installed capacity of 10,000 kW at tertiary-level power stations and 400 kw in small substations.

The reservoir height is 999 m and the total installed capacity is 238.85 million kWh, with total investment of ¥ 479.33 million and total accumulated power generation of 28,400 kW. This is a comprehensive water conservancy and hydropower project serving urban water supply, flood prevention, power generation, irrigation, tourism, and aquaculture.

6. The Hongwawu Reservoir Project includes Hongwawu reservoir, Hongwawu primary power station, Hongwawu secondary station, Hongwawu irrigation area project, and water diversion projects in Laolongdong, Dongpiaohe, and Liujiagou. The Hongwawu dam is a concrete slab rock-fill dam with a height of 41.5 m and a reservoir of 4.98 million m^3, designed with 27.13 million m^3 of annual average impoundment, including 18.38 million m^3 of water diverted from areas of 15.45 km^2 in Dongpiaohe, Laolongdong, and Liujiagou. The drainage area of the reservoir is 6.03 km^2 and inflow water is 8.75 million m^3.

7. The Zhamushui Reservoir Project is the last level station along the Zhamushui river basin and is a comprehensive water conservancy and hydropower project providing urban water supply, combining flood prevention, power generation, and irrigation. The Zhamushui dam is a roller-compacted concrete (RCC) double-curvature arch dam, with a reservoir of 20.01 million m^3, a utilizable capacity of 11.71 million m^3, and a dead storage capacity of 5.96 million m^3. The installed capacity of the station is 10.4 MW and designed annual average generation is 27.28 million kWh.

Hongwawu Reservoir

8. The Hongwawu reservoir is located on the river of Majiahe in the northwest of Yezhou Town, Jianshi County. The reservoir is at a distance of 32 km from the highway of the county. The primary power station is in Dangyang village, Yezhou Town, 19 km away from the county highway. The secondary station is in Xiaochayuan village of Yezhou Town and is 14.5 km apart from the county highway.

9. **Hongwawu dam site runoff.** The inflow water of the Hongwawu reservoir consists of two parts: inflow from the dam site and diversion from other channels.

- Inflow from the Hongwawu dam site is 6.03 km^2.
- Water from an area of 15.45 km^2 with seven channels/tunnels is diverted to the reservoir. The highest conveyance capacity of the diversion system is 3.7 m^3 per second of ground water and 0.42 m^3 per second of spring water.

10. Based on the annual runoff records from 1960 to 2003 for Jianshi power station II and on the area size and the highest diversion water flow as a control point in the calculation, statistics are obtained about the runoff of different areas in the dam site, the inflow to the reservoir, and the inflow from each diversion project. Then, by adding them together in the order of year and month, the average annual water flow of Hongwawu Reservoir from April 1960 to March 2003 are obtained, which are 0.86 m^3 per second as annual average water flow, with a runoff depth of 1,263 mm, and annual average inflow to the reservoir of 27.13 million m^3, including 8.75 million m^3 of inflow from the confluence area of the reservoir itself and 18.38 million m^3 from the diversion system (both the sources account for 82 percent of the total inflow from the natural water source). The diverted amount accounts for 67.2 percent of the total inflow to the reservoir.

11. Currently, the Hongwawu reservoir has lost the storage capacity and the dispatching and operation functions.

12. The flood protection operation control in the flood season is crucial to the reservoir safety, the effect of reservoir flood prevention, and the impounding capability of the reservoir for water resource utilization. The basic tasks for the control operation are reasonable water dispatching to ensure reservoir safety, planned and organized water impounding and utilization, and resolving of the conflict between the reservoir safety and flood prevention of the upstream and downstream, to ensure the security in the flood season and capability and efficiency of the reservoir.

13. Based on the original project plan, with records of experience in the years before the project, the PE should collect, organize, and retain relevant documents and materials to better understand the flood regularity and the ability for flood regulation, to cope with flood inflow, and to compile a plan for operation control in the flood season and then follow the plan strictly.

14. Review comments of the DSP experts on the Hongwawu reservoir based on the inspection of the operation and maintenance (O&M) monitoring plan and the emergency preparedness plan are as follows:

- There has been a detailed O&M monitoring plan for the Hongwawu reservoir.
- A safety responsibility system is established and the responsible persons for both administrative management and safety are identified. The responsibility of each role is clearly defined.
- A flood protection and emergency preparedness plan is compiled. Comprehensive emergency measures and a resettlement plan for downstream inhabitants are proposed.

15. In all, the O&M monitoring and the emergency preparedness plan can effectively ensure the safe operation of the Hongwawu reservoir and dam.

Zhamushui Reservoir

16. Zhamushui River, another name for Guangrun River, is the west branch of Mashui River—primary branch of Qing Jiang River. It originates from Sishi'er Dam, Fengjie County, Chongqing Municipality, heading northeast through Xipiaowan Water Fall, turning to the south at Dongli, flowing through Matitang, Qianjiaqyuan, Xiataizi, Longmenzi, and Eryanzi, broadening under Yiwanshui Ya (cliff), and continuing through Yangongtang Namishui River again, till it finally crosses Jianshi County. It exits through East Gate of the county and merges into Mashui River in Yinren Zhai. Zhamushui River is 40.5 km long, with a flowing area of 248 km^2， with an average slope in the main stream of 31.6 percent and in the upstream of 93 percent, and a height drop of 1,210 m. With its dramatic mountains, deep valleys, and intensive height drops, the Mushui River area is one of the most rainy places in Enshi Prefecture.

17. Zhamushui Power Plant is located 5.5 km upstream of Zhamushui River, northwest of Jianshi County, Enshi State. The Zhamushui dam is situated at 109°41′E and 30°37′5″N, with a

controlled watershed of 136.8 km^2 at the dam site, the main stream 27.2 km long, and an average river bed gradient of 31.6 percent.

18. At present, there are 13 small power stations in the Zhamushui River basin, including the Sishi'er Ba cascade station, and 22 generators, with a total installed capacity of 18,500 kW. The Xiaoxikou power station on the main stream of Mashui River is already commissioned with an installed capacity of 30,000 kW. Zhamushui Power Plant is the last power station along the Zhamushui River basin. It is a water conservancy and hydropower project for power generation, urban water supply, and other utilization including flood protection .

19. Within the Zhamushui River basin area, there are high mountains and steep slopes, with dramatic height drops and climate variations because of height difference. There are high, middle, and low mountainous areas in the whole river basin, with distinct differences of temperature and rain and sunshine hours. Most of the Hongwawu River basin is a high mountainous area of alpine climate, with low temperature, and is foggy and rainy. In the summer, there are abundant rainfalls affected by Pacific monsoon. In the winter, it is cold and snowy, threatened by Siberian high cold. In the meteorological history record of Jianshi County, the highest temperature of the highland area in the summer is 31.3℃ and the lowest temperature in winter could reach −15.6℃. The annual average temperature is 9.3℃, and the south wind is the dominant wind direction, at 19.2 m per second maximum wind speed. The rainfall increases progressively from the downstream to upstream, under the significant influence of topographic features.

20. Rainfall time is not evenly distributed in the area. Annually, the rainfall from May to October accounts for 72 percent of the yearly total.

21. The Zhamushui hydropower project is designed for power generation and urban water supply, combining flood prevention and tourism. The project is ranked a category III medium project. The normal impounded level is 655 m, maximum flood level 657.9 m, total storage 20.01 million m^3, total installed capacity 10 MW, annually generating power 27.28 million degrees, highest dam 77.5 m. The main structures include an RCC double-curvature arch dam, crest spillways, power generation diversion tunnels, water supply tunnels, the powerhouse, and the switching station.

22. According to Hydropower Project Standards and Flood Standards (SL252-2000) and Review of Preliminary Design Report on the Zhamushui Hydropower Project in Guangrun River Basin of Jianshi County ([2005] 893 of Hubei Development Reform Commission), it was defined that this project is a category III medium project. The dam, dam body flood relief structures, power generation diversion system, powerhouse, and transformer substations are all III standard and the secondary structures are IV standard.

23. The dam (dam, spillway structures, and power generation tunnel water inflow structure) is designed at the standard of 50 years of reoccurrence of flood (design flood), with a peak flow at 960 m^3 per second, and 500 years of the worst flood (check flood), with a peak flow at 1,330 m^3 per second. The power tunnel and powerhouse are designed at the standard of 50 years of design flood, with a peak flow at 960 m^3 per second, and 200 years of check flood, with a peak flow at 1,190 m^3 per second, respectively.

24. The dam is reachable at convenient transportation, with national highway 209 and 318 to Jianshi County and Yi-Wan railway and Hu-Rong highway passing through Jianshi. There is a permanent road of 1.5 km length leading to the plant from the county. Another permanent road from the county to the left dam abutment is 6.5 km, including a section of 5 km county-level road with an asphalt pavement of 6 m wide, and another newly built road is 1.5 km, with a clay-bound macadam pavement. The construction road along the river from the plant to the riverbed of the dam is 1.4 km.

25. The dam is an RCC double-curvature arch dam, with a crest elevation of 659 m and a river plate foundation elevation of 581.5 m, about 77.5 m high with a crest length of about 142.024 m, dam base of 12.5 m wide, and dam top of 5 m wide. The crest has 3 spillways of 6.3 × 7 m, and the crest elevation is 648.70 m. On the elevation of 605.0 m in the dam, a gallery is constructed for curtain grouting, drainage, and transportation. At the elevation of 659 m (at the dam crest), in the mountains of both banks, grouting galleries are built. As the thickest part of the dam is only 12.5 m, there is no structure of longitudinal joints on the dam body.

26. The water relief structure is designed in the form of a crest spillway. The spillway weir crest has an elevation 648.70 m long and 7 m wide, with three holes and a radial steel sluice gate, which is 6.3 m high. It is designed as a waterways experiment station weir surface curve (formulation $y = 0.09019 \times 1.85$). Chute of 1:1 is connected to the back of the dam. The differential outflow ridge, which combines the outer pick and the inner drop, combines and tears out the running water tongue and pulls it out longitudinally to increase the water inlet area. The water from the two holes has a slight collision in the air, which is good for energy dissipation.

27. The powerhouse of the station is built on the terrace of the left bank about 1 km downstream of the dam site. The symmetric axis of the main workshop of powerhouse is in the direction of southwest. The installation room and central monitor room are in the southeast corner. The auxiliary workshop is linked to the main workshop. The layout of the main workshop, the central monitor room, and the installation room of the auxiliary workshop is like the Chinese character '品'.

28. The plant is located on a flat land, with an outdoor substation system on the right side of the road to the plant at the front gate, with an area of 24 × 56 m^2. The powerhouse is installed with a water-turbine generator with a vertical metal spiral casing elbow bend draft tube. The distance between two units is 8 m. The main workshop is 19 m long, 13.5 m wide, and 256.5 m^2 large. The layout consists of a draft tube layer, butterfly bamper layer, water turbine layer, and electric generator layer. The auxiliary workshop is divided into two parts. One part is the bus room, with a rigid link to the main house, also 19 m long, 0.7 m wide, and 133.0 m^2 large. The other part is a central control room, which is on the left side of the main workshop, with a plan view size of 9.5 × 13.5 m, an area of 128.25 m^2.

29. The main transformer and the switching station are placed on the right side of the road to the plant. The outdoor land elevation is 581.49 m and the area is 13,444 m^2.

30. The dam in this project lies in the 'U' shape valley. In this location, the river bed is narrow and the mountains are big, with thick-layered limestone and dolostone. Given the landform and

geological conditions of this area, the tunnel diversion system is applied and a tunnel is built on the left bank of the river.

31. The diversion tunnel's entrance has an elevation of 588.0 m from the bottom, and the cross section is in the shape of a city gate, which is 5.0 m wide at the bottom, 6.5 m high to the top of the tunnel, with a vertical wall 4.0 m high, at the central angle of the arch 180°. The exit of the tunnel has 297.8 m stake marks, with the bottom elevation 588.0 m. The entrance and exit are both straight reaches, with two bend segments on the horizontal plane. The total length of the diversion tunnel is 297.8 m, in which the sluice chamber segment is 12 m and the transition segment is 12 m, in a trumpet form. There is an elliptic curve at the top, with a long axis of 6 m and a short axis of 2 m, one-third of the long axis. Both sides of the wall are vertical, concrete lining of 1.5 m thick at the full section in the transition segment. At the entrance, there is a blocking sluice gate, fixed by poles. After the transition segment, there is a 12 m long straight tunnel segment, with full cross-section concrete lining 0.5 m thick. The coffer dam of the tunnel is made of surrounding rocks of class II stability, with a very low-level water permeability, so the natural condition for the tunnel is positive. Therefore, there is only lining at the entrance segment and 7 m at the exit with reinforced concrete. No retaining and protecting is needed in other segments in the tunnel.

32. The preliminary preparation work of the Zhamushui hydropower project was started in July 2007. The dam completion was accepted on March 10, 2012, and on July 11, 2012, the impoundment of the reservoir was completed and accepted. The unit start-up was accepted on August 29, 2012, and the power generation was connected to the grid. In 2015, the final stage of project was completed.

33. The construction was resumed in January 2015, and the part of dam crest guardrails, access tunnel portals, grouting, and so on were completed in June 2015. All the other projects of diversion tunnels, access tunnel, power generation conduit structure, powerhouse, and substations have been completed, except for the spillway sluice gates of the rolling concrete arch dam.

- The diversion tunnel was fully completed, including the concrete lining of the exit portal and the concrete lining of sluice chamber in the entrance portal. It was blocked up in June 2012 and the diversion was completed.

- The elevation of non-spillway section of the dam on both side banks is 659 m, and the overflow section is 648.7 m. Dam face concrete pouring, the dam back protection, and dam base and dam curtain grouting have been completed. The following projects were also completed in 2015: construction and grouting of grouting tunnels and drainage tunnels on both side banks; the internal monitoring instrumentation and installation and the initial test; and dam body joints, slope and bank joints, grouting, dam crest guardrails, and access tunnel portal completion.

- Tunneling and lining of the power generation diversion tunnel have been completed and diversion for generation has started.

- Powerhouse has been completed and commissioned for power generation.

34. Review comments of the DSP experts based on the inspection of the O&M monitoring plan and emergency preparedness plan of the Zhamushui reservoir are as follows:

- A detailed and concrete O&M monitoring plan has been made for the Zhamushui reservoir. Monitoring facilities will observe and analyze the leakage inside the dam body and other situation outside the dam to ensure the dam safety on time.

- The safety responsibility system is set up. The responsible persons for both administrative management and safety are identified. Responsibilities of each role are clearly defined.

- Flood protection and emergency preparedness plan are compiled. Comprehensive and all-sided emergency preparedness measures and safe resettlement plan for inhabitants living in the downstream are proposed in the plan.

- Invite experienced consultants to conduct further research and prepare demonstration on the stability problem of right dam abutment and make plans to solve the problems according to the analysis result.

- Strengthen the inspection and check-up of the daily operation of the dam, improve the analysis and organization of dam safety monitoring data, and report to the Administrative Department when abnormalities are discovered.

35. **Suggestion**. The Administrative Department of the reservoir is advised to make a scientific and feasible flood protection plan according to the requirement of Guidelines on Reservoir Flood Prevention Emergency Preparedness Plan issued by the State Flood Control and Drought Relief Headquarters Office.

Table C.1. Category and Level for Water Conservancy and Hydropower Projects (GB50201-94)

Project Category	Reservoir		Flood Prevention		Water Log Control	Irrigation	Water Supply	Hydropower Station
	Project Size	Total Capacity (108 m^3)	Importance to Urban and Industries	Farms Protected (10,000 mu)	Controlled Areas (10,000 mu)	Irrigated Area (10,000 mu)	Importance to Urban and Industries	Installed Capacity (104 kW)
Ⅰ	Large (1)	>10	Very important	>500	>200	>150	Very important	>120
Ⅱ	Large (2)	10–1.0	Important	500–100	200–60	150–50	Important	120–30
Ⅲ	Medium	1.0–0.10	Moderate	100–30	60–15	50–5	Moderate	30–5
Ⅳ	Small (1)	0.10–0.01	General	30–5	15–3	5–0.5	General	5–1
Ⅴ	Small (2)	0.01–0.001		<5	<3	<0.5		<1

Table C.2. Level of Hydraulic Structures

Project Level	Permanent Hydraulic Structures Level		Temporary Hydraulic Structures Level
	Main Structure	Secondary Structure	
Ⅰ	1	3	4
Ⅱ	2	3	4

Project Level	Permanent Hydraulic Structures Level		Temporary Hydraulic Structures Level
	Main Structure	Secondary Structure	
Ⅲ	3	4	5
Ⅳ	4	5	5
Ⅴ	5	5	

Table C.3. Flood Prevention Standard of Reservoir Structures

Reservoir Category	Dam and Main Hydraulic Structures	Flood Prevention Standard (Reoccurrence [Year])		
		Design Standard	Check Standard	
			RCC Dam Masonry Dam	Earth Dam
Large (1)	1	1,000 – 500	5,000 – 2,000	10,000 – 5,000
Large (2)	2	500 – 100	2,000 – 1,000	5,000 – 2,000
Medium	3	100 – 50	1,000 – 500	2,000 – 1,000
Small	4	50 – 30	500 – 200	1,000 – 500

Note: The check flood standard can be enhanced one level if there is a catastrophic hazard to the downstream by dam accidents.

Table C.4. Dam Safety Spreadsheet of World Bank Loan Jianshi County Guangrun Hydropower Project Area

No.	Reservoir Name	Location	Time of Completion (Year)	Dam Height (m)	Dam Type	Capacity ($\times 10^4 m^3$)		Recent Safety Appraisal Time	Current Safety Level	Flood Prevention Standard		Remediation Measures for Unsafe Dams（start/end dates and funding source）	Reservoir Management Department	Next Step
						Total	Balance			Design	Check			
1	Hongwawu	Jianshi County	2009	42	Concrete slab rock-fill dam	498	n.a.	2019.4	Level II	85.9	118	Constructed new reservoir, storage completed and accepted in August 2009	Jianshi County Water Resource Bureau	Completion and acceptance in 2021
2	Zhamushui		2012	77.5	RCC double-curvature arch dam	2001	n.a.	2019.4	Level II	960	1,330	Constructed new reservoir, storage completed and accepted in May 2012	Jianshi County Water Resource Bureau	Completion and acceptance in 2021

2. Dam Safety Objectives

2.1 Dam Safety on Operation

2.1.1 Dam Safety on Flood Prevention

36. Dam safety on flood prevention means that when design flood occurs, the reservoir can still work normally, and when check flood occurs, the reservoir cannot work but the dam is still safe, without overtopping and collapse. The standards of design flood and check flood must follow the State Flood Prevention Standard (GB50201-94) (please see table C.3 for detailed regulations). A high-standard flood prevention and protection system must be set up, while taking measures to eliminate dangers; reinforce the reservoir; renovate the technology; and update, retrofit, and supplement the main hydraulic structures and monitoring facilities.

(a) **Reinforcement and renovation of the project.** Conduct dam safety assessment and appraisal, reinforce and renovate the dam to eliminate hidden dangers, and retrofit and update the aging facilities that are out of repair, to ensure the normal operation and good maintenance of the project facilities.

(b) **Full compliance with the Flood Prevention Standard.** Make the flood prevention standard comply with the State Standard on Flood Prevention (GB50201-94) and enhance the prevention system to a higher level to meet the need of the flood protection capability, downstream population, and the level of economy cluster in the area.

(c) **Update and renovation of the sluice gate opening/closing system.** Based on the full appraisal and detection, (the project company shall) reinforce to remove the hidden dangers, examine or replace facilities that have completed their depreciation life, further regulate the operation, and gradually establish a centralized computerized control system to ensure normal function, reliable operation, and application of advanced equipment.

(d) **Completion, update, and renovation of observing and monitoring facilities.** Complete, perfect, and supplement the observing (required) system for different types of dams. Retrofit and renovate the aging and damaged facilities and equipment. Set up progressively the computerized system for automatic data collection and sorting.

(e) **Set up and complete the automatic measuring and reporting system** for rain and water/flood conditions.

2.1.2 Dam Safety on Quality

37. The appearance and filling quality of the dam, spillway, and water release tunnel all met the requirement of project design; there are no obvious deformation and cracks in the dam; the leakage in the body and base of the dam is within the permissible range; the dam safety monitoring, flood prevention, and emergency rescues transportation and management systems are well equipped; and sluice gates can be opened and closed easily. Overall, the dam is operating safely.

38. At the project implementation stage, the PE should set up sound quality and safety monitoring system, strengthen the institution, and build the supervising system with clearly defined accountabilities, code of conduct, effective supervision measures, and strong supporting systems. At the operation stage, there must be an operation plan to ensure the safe operation of the project. The PE shall conduct daily security inspection and detection as required, implement regular inspection before and after flood seasons, and conduct special examination when big flood or earthquake occurs. It shall discover problems in time through monitoring, inspection, measuring, and reporting and take action to solve problems to ensure the dam safety. The PE shall undertake regular safety appraisal according to the Reservoir and Dam Safety Appraisal Method.

Table C.5. Records of Flood Discharge Time and Current

Date	Time	Water Level (m)	Water Head on the Dam (m)	Current (m^3/s)	Water Discharged (10,000 m^3)
July12,2014	16:00	649.9	1.2	60	21.6
August 28, 2014	22:00	650.1	1.4	70	25.2
September 2, 2014	11:00	651.7	3	220	79.2
September 19, 2014	11:00	649.5	0.8	45	16.2
July 1,2015	8:00	649.1	0.4	12	4.32
June 1, 2016	21:00	650.06	1.36	60	21.6
June 2, 2016	17:00	650.52	1.82	90	32.4
June 24, 2016	17:00	652.2	3.50	229.00	82.44
June 30, 2016	5:00	652.8	4.10	290.34	104.52
July 19, 2016	23:00	651	2.30	121.99	43.92
July 9, 2017	7:00	650.66	1.96	95.97	34.55
July 15, 2017	1:00	650.08	1.38	56.70	20.41
October 5, 2017	14:00	649.83	1.13	33.9	12.204
July 6, 2018	17:00	649.32	0.62	17.07	6.15
July 7, 2018	1:00	649.23	0.53	13.49	4.86

39. With years of high water level tests, the dam and the reservoir banks appear in normal condition, and the data analysis from monitoring system shows there are no abnormalities.

2.2 Dam Ecological Environment

40. The reservoir can provide full benefits, given the safe operation of the reservoir and dam. Besides the economic benefit, the project also avoids a series of social and environmental problems caused by flooding, while the environmental benefit is difficult to measure and demonstrate with economic indicators. It is of great significance to the sustainable development of the local economy that the dam downstream area is not threatened by flood and the ecology is in a virtuous circle to a new relative stability. In consequence, economic and social benefits are realized in addition to the benefit of water and soil loss control and the improvement of ecological environment. After reinforcement, the reservoir capacity for flood prevention is improved, and so is the flood peak cutting and flood detention abilities, which means that the reservoir can detain part of flood peak water, protect the downstream riverway from overwashing, and avoid the deterioration of the ecological environment of the river basin. Therefore, it has positive influence on the ecological environment protection and improvement in the area and surroundings of the reservoir.

2.3 Social and Economic Benefit

41. When dam safety is improved, besides the guaranteed life and property security in the downstream, the irrigation and water supply for production and living is also guaranteed. This brings the high and stable yield of agriculture, increase of pay for the farmers, and social stability; this also promotes the high quality and high efficiency of agriculture development. Along with enhancing the reservoir water supply capacity, which leads to the planting structure adjustment and the income increase for farmers, more significant socioeconomic benefits are realized, with more vigor and vitality to the development.

3. Dam Safety Appraisal Plan

3.1 Appraisal Working Procedure

42. According to the Reservoir and Dam Safety Appraisal Method issued by the Ministry of Water Resources, the Administrative Department of the reservoir project shall delegate to qualified institutions on water conservancy and hydropower survey, design, and scientific research to conduct appraisal as per the Guideline on Reservoir and Dam Safety Appraisal. A panel of experts is formed by the provincial Administrative Department and shall participate in appraisal review meetings organized by the department. The panel consists of experts in hydraulic work, hydrology, planning, geology, electromechanics, metal structure, and so on. The panel shall review the dam safety appraisal report and on-site safety inspection report and when necessary conduct the inspection on site. The panel shall identify the dam safety category and issue the final dam safety appraisal report.

3.2 Dam Safety Appraisal Plan

43. As stipulated in Article 5 of provisions in Guidelines on Dam Safety Appraisal Method, the first reservoir storage safety appraisal shall be completed within 5 years after the acceptance the project, which will be followed up with a new appraisal every 6 to 10 years. Special inspection and appraisal shall be arranged when a catastrophic flood, violent earthquake, major accident, or other abnormality that will risk the safety occurs.

44. Appraisal was planned as follows:

- The Hongwawu reservoir completed the first storage safety appraisal in August 2009. The dam safety appraisal was planned in 2019 after the flood season.

- The Zhamushui reservoir completed storage safety appraisal in April 2012. In 2014, the risk elimination and reinforcement projects were completed and accepted. The dam safety appraisal was planned in 2019 after the flood season.

3.2 Review Comments from the DSP Experts

45. The Zhamushui dam has experienced years of high water level tests, and the dam and reservoir banks appear normal. There are no abnormalities according to the statistics analysis of the dam safety monitoring data.

46. The Hongwawu dam has been operating at the dead water level (low water level). In the regular inspection and checking, the dam and reservoir banks appear in normal condition.

ANNEX D: COMMITMENT LETTER FROM THE HUBEI FINANCIAL BUREAU

湖北省财政厅国际财金合作处

Dear Mr. Martin Raiser,

Reference is made to the Community Development Carbon Fund Clean Development Mechanism Certified Emission Reductions Purchase Agreement between Hubei Guangrun Electricity Generation Co., Ltd (purchased by Guodian in 2010) and the International Bank for Reconstruction and Development (the Bank) as trustee of the Community Development Carbon Fund dated October 27, 2006 and the two amendments dated November 15, 2012 and May 18, 2015 respectively; and Loan Agreement between the People's Republic of China (the Borrower) and the International Bank for Reconstruction and Development (the Bank) dated January 21, 2003, and the amendments to it (Loan No. 4666-CHA).

We understand that the loan was closed in 2011 and the Emission Reduction Purchase Agreement (ERPA) was also closed on June 30, 2018. Given that some project activities of Guangrun Project still have not been completed to rectify design issues in the dam, we will continue the project supervision to ensure the National and Bank's safeguards policies are fully complied with for activity No. 1-4 to be completed by December 31, 2022, while for activities No. 5 and 6 to be completed by December 31, 2023 and December 31, 2024 respectively. We note that the ownership of the Guangrun Project is expected to be transferred from Guodian Guangrun Hydropower Development Co., Ltd. to Jianshi County People's Government. The Provincial Financial Bureau will supervise both the existing owner, namely Guodian Guangrun Hydropower Development Co., Ltd. and the prospective owner, namely Jianshi County People's Government to ensure that the transfer of ownership has minimum implications on the implementation of these activities, and that all parties are committed to their timely completed both prior and after the ownership transfer. A biannual implementation progress status report on these remaining project activities will be submitted by the IA to Provincial Financial Bureau and the Bank every six months starting from July 1, 2020 until successful completion of the activities of the detailed action plan set out below.

- 1 -

Guangrun Hydropower Development Project
Action Plan

No.	Activities in Chinese	Activities	Due Date
To be completed by the given deadline			
1	完成闸木水右岸边坡处理方案和实施	The slope treatment plan and execution for the right bank of the Zhamushui dam	May 31, 2022
2	闸木水大坝右岸边坡处理完成后尽快完成坝顶溢洪道闸门安装	The installation of sluice gates of the crest spillway of Zhamushui dam when the slope treatment for the right bank is completed.	December 31, 2022
3	确定红瓦屋右岸第二阶段渗漏处理方案	Confirm the plan of the second stage leakage treatment of the right bank of Hongwawu reservoir	December 31, 2022
4	红瓦屋大坝监测仪器计划	Updated Dam Monitoring System and Instrumentation Plan	December 31, 2022
5	安全监测系统运行（第一阶段，闸木水大坝）	Dam Monitoring System Functioning （With Zha Mushui）	December 31, 2023
6	安全监测系统运行（第二阶段，红瓦屋大坝）	Dam Monitoring System Functioning （With Hong Wawu）	December 31, 2024
7	项目业主（贷款人）变更需事先得到世行的审查和无反对意见	The Ownership change of the project need to get approval of the Government and no-objection of the World Bank's beforehand and with proper due diligence	Continuously

Sincerely yours,

Hubei Provincial Department of Finance
International Financial Cooperation Department
May 19, 2020

ANNEX E: PICTURES OF THE PROJECT SITE

Hongwawu Dam

Leakage at Hongwawu - Bottom Treated and Upper Untreated Areas

Hongwawu Power Station 1

Hongwawu Power Station 2

Zhamushui - Missing Sluice Gates

Zhamushui - Untreated Right Bank

Zhamushui - Power Station

Community Benefits - Local School